ELITE®
FLOW CONTROL

WE CONTROL THE FLOW

Elite provides comprehensive Valve, Automation Packages, and Instrumentation solutions for all industrial applications, ensuring optimal control of fluid flow with our expertise: "We control the flow."

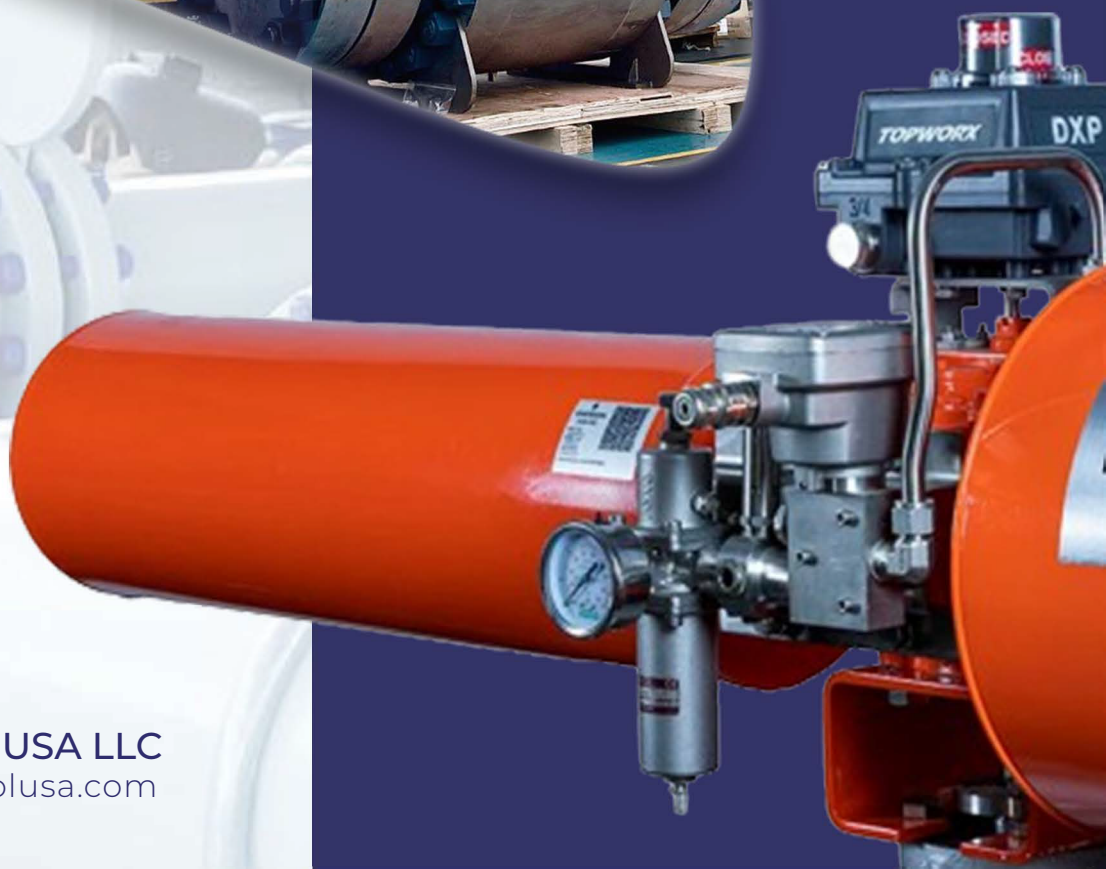

Elite Flow Control USA LLC
www.eliteflowcontrolusa.com

COMPANY PROFILE

Elite provides comprehensive Valve, Automation Packages, and Instrumentation solutions for all industrial applications, ensuring optimal control of fluid flow with our expertise: "We control the flow."

Elite Flow Control is one of the leading and renowned brand of Valves having its own independent manufacturing facilities and global existence in the United States of America, United Kingdom and China.

Our design and manufacturing range includes Ball Valves, Gate Valves, Globe Valves, Check Valves, Plug Valves, Butterfly Valves, Control Valves, Actuated Valves, and have a dedicated PTFE / PFA lining facility for PTFE / PFA Lined Valves, Pipe Spools, Pipe fittings, and associated equipment for high corrosive/chemical applications.

MISSION

ELITE FLOW CONTROL FOCUSED TO PROVIDE THE SUPERIOR QUALITY VALVES AT COMPETITIVE PRICES TO ITS CUSTOMERS AROUND THE WORLD BY UTILIZING THE COMPANY'S HUMAN RESOURCES AND ADVANCED TECHNOLOGY EQUIPMENT WITH THE STRONG COMMITMENT TO R&D, HEALTH, SAFETY, ENVIRONMENT AND COMPANY'S CORE VALUES.

VISION

TO MAKE OUR BRAND "THE FIRST CHOICE OF CUSTOMERS"..

Elite Philosophy

Elite operates on philosophy to provide Immediate Response, Excellent Quality Services, Quick Delivery and Customer Satisfaction followed by our Core Values "What we commit, we deliver" based on this we are having satisfied customers in more than 25 countries and ever expanding throughout the world.

Parts and Material List - Pneumatic Actuator

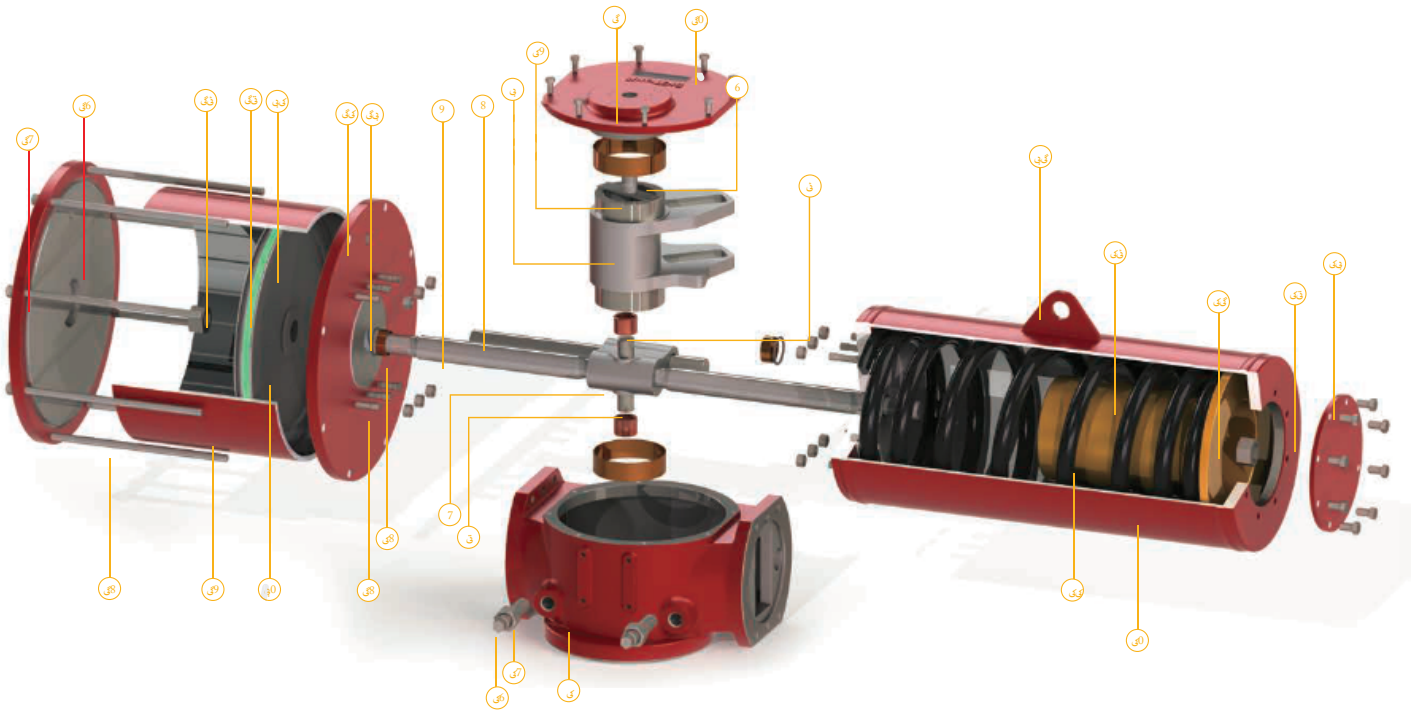

1. **Centre Body** Ductile Iron
2. **Centre Body Cover** Ductile Iron
3. **Yoke** Carbon Steel
4. **Bearing** Bearing Steel
5. **Sliding Busing** Bearing Steel
6. **Oilless Bearing** Composites
7. **Sliding Block** Carbon Steel
8. **Thrust Bar** Ally Steel (Chromium Plated)
9. **Connecting Rod** Alloy Steel (Chromium Plated)
10. **Spring Cartridge** Carbon Steel
11. **Spring Base** Carbon Steel
12. **Stop Screw** Carbon Steel
13. **Hexagon Bolt** Carbon Steel
14. **Spring Cover** Carbon Steel
15. **Spring** Alloy Steel
16. **Adjustable Bolt** Carbon Steel
17. **Nut** Carbon Steel
18. **Rob Bushing** Composties
19. **Accessory-Mounted** Shaft Stainless Steel
20. **Hexagon Bolt** Carbon Steel
21. **Inner Cover** Stainless Steel
22. **Oilless Bearing** Composites
23. **O-ring** NBR
24. **O-ring** NBR
25. **Nut** Carbon Steel
26. **End Flange** Carbon Steel
27. **Nut** Carbon Steel
28. **Stud Bolt** Carbon Steel
29. **Cylinder** Carbon Steel (inside nickel-plated)
30. **Piston** Ductile Iron
31. **Guiding Ring** Composites
32. **Lifting Point** Carbon Steel

Corrosion Protection Class

Corrosion Level	Undercoat			Topcoat			Durability
	Type	Coating Number	Thickness(μm)	Type	Coating Number	Thickness(μm)	
Moderate corrosion-C3	Epoxy	1	60	Polyurethane	2-3	120	L/M/H
Strong corrosion-C4	Epoxy	1	60	Polyurethane	2-4	160	L/M/H
Extreme corrosion (Industrial-grade)C5-1	Epoxy	1-2	80	Polyurethane	3-4	240	L/M/H
Extreme corrosion (Marine-grade)C5-M	Epoxy	1-2	80	Polyurethane	3-4	320	L/M/H

Paint is applied on the basis of the operating environments and service life of BG range actuators.
The above chart is in accordance with corrosion protection standard ISO12944.

Sizing of Actuators and Torque Characteristics

Steps to Select Valve Actuators

First, Identify the valve type for actuators sizing:

Ball valves | Butterfly valves | Plug valves

Elite recommend that the valve manufacturers offer the torque values of valves operating at six positions before sizing actuators.
If there is only one given torque value at valve start position, check the first actuator(see the torque outqut chart)whose starting
torque output at required air supply meets or exceeds the given value,and calculate the torque values at other five positions.
According to the torque outqut chart, select appropriate actuator whose torque outputs exceed the valve torque at all positions.

Sample of Actuator Sizing：

To size an actuator meeting a given start torque 960Nm of a ball valve, check the first size that generates more than 960Nm in the six positions of the torque table. According to the data of Spring-Return Actuator Torque Table, G1-P300SR5 supplies more torque than 960Nm. This is suitable to operate the ball valve.

BTO (0°)	RTO (45°)	ETO (90°)	BTC (90°)	RTC (45°)	ETC (0°)
960	960x0.6	960x0.8	960x0.7	960x0.6	960x0.9
2081	971	1316	2131	1000	1366
2.1	1.7	1.7	2.7	1.7	1.6

Notes:

Opening direction: Break to open (BTO)、Running to open(RTO)、End to open(ETO)
Closing direction: Break to close (BTC)、Running to close(RTC)、End to close(ETC)
Safety factors: 1.25 to 1.5(25% to 50%)
If the first found actuator does not exceed the stem torque, check the next size actuator.
Torque Coefficient in Different Positions

Valve Type	BTO(0°)	RTO(45°)	ETO(90°)	BTC(90°)	RTC(45°)	ETC(0°)
Floating ball valve	1.0	0.6	0.8	0.8	0.6	0.9
Trunnion mounted ball valves	1.0	0.55	0.7	0.75	0.55	0.85
Triple-eccentric butterfly valves	1.0	0.35	0.3	0.45	0.35	0.85
Plug valves	1.0	0.5	0.8	0.8	0.5	0.95

Contact Elite for actuator sizing of the other valves that are not covered by our standard range.

Torque Output Characteristics

Elite actuators can be provided with ether symmetrical or canted torque arms, which helps valves meet a wide range of torque.
The symmetric yoke construction is commonly used for all types of valves.
The canted yoke construction delivers peak torque when opening valves but less torque when closing, suitable for butterfly valves.

The use of canted yoke can help customers reduce costs by its unique torque characteristics.

Canted Yoke - Torque Output Profiles

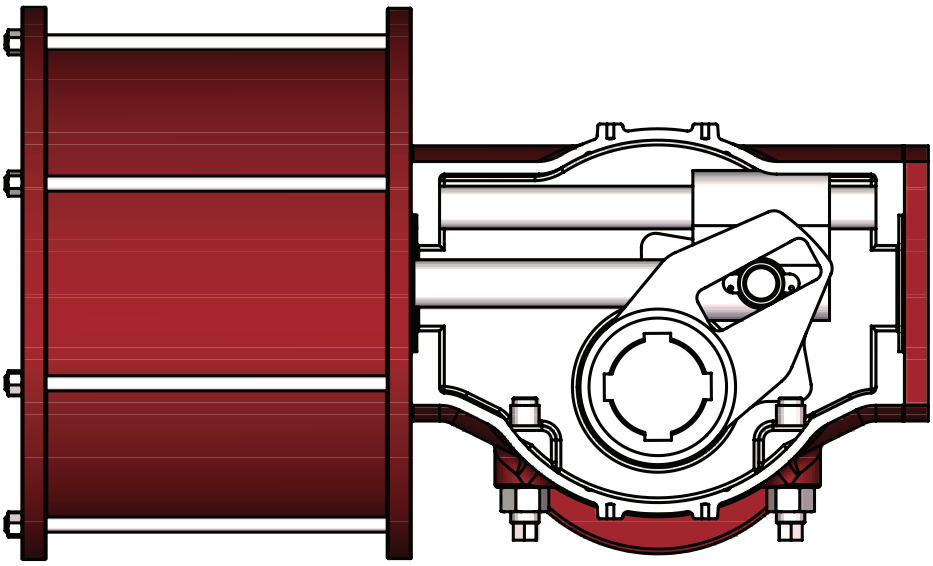

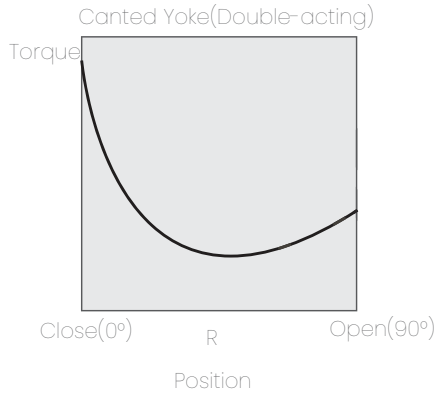

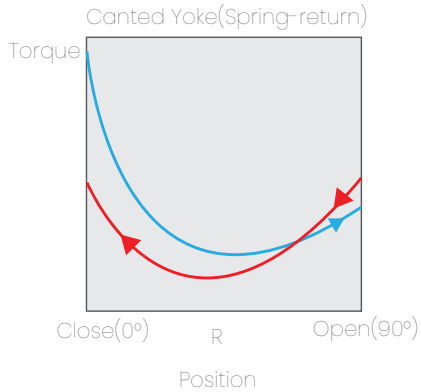

Symmetric Yoke - Torque Output Profiles

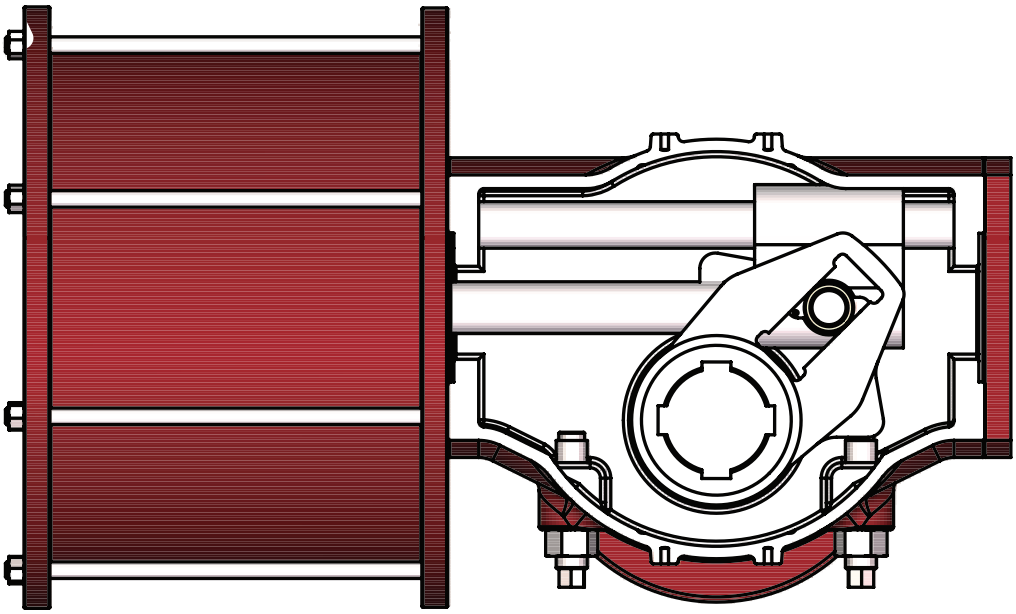

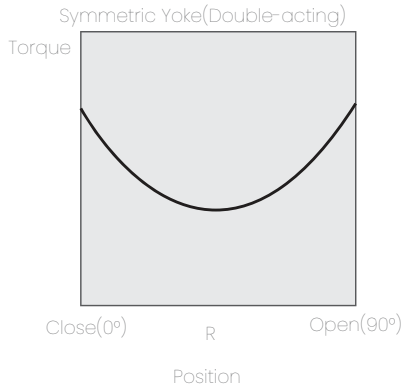

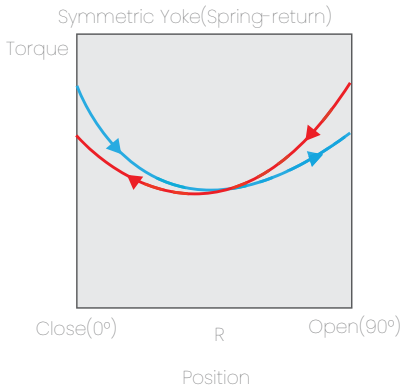

BTS-G Range Pneumatic Actuators

Double Acting torque output
Symmetric Yoke Configuration

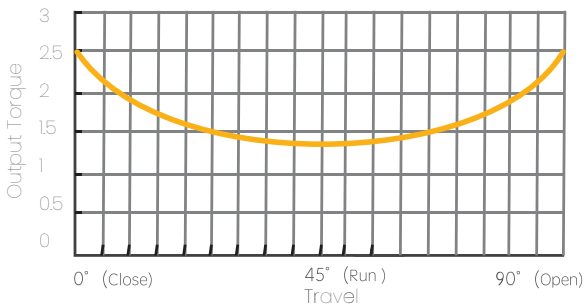

Actuator Model	Torque outputs at different air supply pressure (Unit:Nm)											
	3 barG			4 barG			5 barG			6 barG		
	0°	45°	90°	0°	45°	90°	0°	45°	90°	0°	45°	90°
G04-P105	199	114	199	266	152	266	332	190	332	398	228	398
G04-P125	291	166	291	388	222	388	485	277	485			
G05-P125	352	202	352	470	269	470	587	336	587	705	403	705
G05-P160	450	257	450	600	343	600	750	429	750	899	514	899
G0-P180	549	314	549	732	419	732	915	523	915	1098	628	1098
G0-P200	683	391	683	911	521	911	1139	651	1139			
G1-P200	996	569	996	1328	759	1328	1660	949	1660	1992	1139	1992
G1-P250	1556	890	1556	2075	1186	2075	2593	1483	2593			
G1-P300	2241	1281	2241	2987	1708	2987						
G2-P300	2930	1675	2930	3907	2234	3907	4883	2792	4883			
G2-P350	3988	2280	3988	5317	3041	5317						
G3-P350	4457	2549	4457	5943	3398	5943	7429	4248	7429	8914	5098	8914
G3-P400	5822	3329	5822	7762	4439	7762	9703	5548	9703			
G3-P450	7368	4213	7368	9824	5618	9824						
G4-P450	8454	4834	8454	11272	6446	11272	14090	8057	14090	16908	9668	16908
G4-P500	10437	5968	10437	13916	7958	13916	17395	9947	17395			
G4-P550	12629	7221	12629	16838	9629	16838						
G5-P500	13884	7939	13884	18512	10586	18512	23140	13232	23140	27768	15879	27768
G5-P550	16800	9607	16800	22399	12809	22399	27999	16011	27999	33599	19213	33599
G5-P600	19993	11433	19993	26657	15243	26657	33321	19054	33321			
G5-P2500	27768	15879	27768	37024	21171	37024						
G7-P600	24129	13798	24129	32172	18397	32172	40215	22997	40215	48259	27596	48259
G7-P700	32843	18781	32843	43790	25041	43790	54738	31301	54738	65685	37561	65685
G7-P2500	33513	19164	33513	44684	25552	44684	55855	31940	55855	67026	38328	67026
G7-P750	37702	21559	37702	50269	28746	50269	62837	35932	62837	75404	43119	75404
G7-P2550	40551	23188	40551	54067	30918	54067	67584	38647	67584			
G7-P800	42896	24530	42896	57195	32706	57195	71494	40883	71494			
G8-P2550	48197	27561	48197	64263	36748	64263	80329	45935	80329	96395	55122	96395
G8-P800	50986	29155	50986	67981	38874	67981	84976	48592	84976	101971	58311	101971
G8-P850	57558	32914	57558	76744	43885	76744	95930	54856	95930	115116	65827	115116
G8-P2600	57359	32800	57359	76478	43733	76478	95598	54666	95598	114717	65599	114717
G8-P900	64529	36900	64529	86038	49200	86038	107548	61499	107548	129057	73799	129057
G8-P2650	67317	38494	67317	89756	51325	89756	112195	64157	112195	134634	76988	134634
G8-P2700	78072	44644	78072	104095	59525	104095	130119	74407	130119			
G8-P1000	79665	45555	79665	106220	60740	106220	132775	75925	132775			
G9-P900	83763	47899	83763	111684	63865	111684	139605	79831	139605	167526	95797	167526
G9-P2700	101343	57951	101343	135124	77268	135124	168905	96586	168905	202686	115903	202686
G9-P1000	103411	59134	103411	137882	78845	137882	172352	98557	172352	206822	118268	206822
G9-P1100	125128	71552	125128	166837	95403	166837	208546	119254	208546	250255	143104	250255
G9-P2800	132366	75692	132366	176488	100922	176488	220611	126153	220611	264733	151383	264733
G9-P2900	167526	95797	167526	223368	127730	223368	279210	159662	279210			
G10-P1200	193034	110384	193034	257379	147178	257379	321724	183973	321724	386068	220767	386068
G10-P1300	226547	129547	226547	302063	172730	302063	377578	215912	377578	453094	259095	453094
G10-P21100	324405	185506	324405	432540	247341	432540	540675	309176	540675			
G10-P21200	386068	220767	386068	514758	294356	514758						

Note: 0° is BTO and ETC, 45° is RTO and RTC, 90 is ETO and BTC.

BTS-GC Range Rneumatic Actuators

Double-acting torque output
Canted yoke configuration

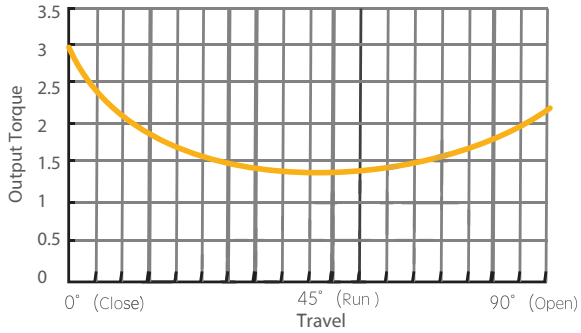

Actuator Model	Torque outputs at different air supply pressure (Unit:Nm)											
	3 barG			4 barG			5 barG			6 barG		
	0°	45°	90°	0°	45°	90°	0°	45°	90°	0°	45°	90°
GC0-P180	691	323	485	921	431	647	1151	539	809			
GC0-P200	853	399	599	1137	532	799	1421	665	998			
GC1-P200	1205	564	846	1607	752	1129	2008	940	1411	2410	1127	1693
GC1-P250	1883	881	1323	2510	1174	1763	3138	1468	2204			
GC1-P300	2711	1268	1904									
GC2-P300	3545	1659	2490	4727	2212	3321						
GC2-P350	4826	2258	3390									
GC3-P350	5393	2523	3789	7191	3364	5052	8989	4205	6314			
GC3-P400	7044	3296	4948	9392	4394	6598						
GC3-P450	8915	4171	6263									
GC4-P450	10229	4786	7186	13639	6381	9581	17049	7976	11976			
GC4-P500	12629	5908	8871	16838	7878	11828						
GC4-P550	15281	7149	10734									
GC5-P500	16800	7860	11801	22399	10480	15735	27999	13100	19669	33599	15720	23603
GC5-P550	20327	9510	14280	27103	12681	19039	33879	15851	23799	40655	19021	28559
GC5-P600	24191	11318	16994	32255	15091	22659	40319	18864	28323			
GC5-P2500	33599	15720	23603									
GC7-P600	29196	13660	20510	38929	18213	27347	48661	22767	34183	58393	27320	41020
GC7-P700	39740	18593	27916	52986	24790	37222	66233	30988	46527	79479	37185	55832
GC7-P2500	40551	18972	28486	54067	25296	37981	67584	31620	47477	81101	37944	56972
GC7-P750	45619	21344	32047	60826	28458	42729	76032	35573	53411			
GC7-P2550	49066	22956	34468	65422	30608	45957						
GC7-P800	51905	24284	36462	69206	32379	48616						
GC8-P2550	58319	27285	40968	77758	36380	54624	97198	45475	68279	116637	54570	81935
GC8-P800	61693	28864	43338	82257	38485	57784	102821	48106	72230	123385	57727	86675
GC8-P850	69645	32584	48924	92860	43446	65232	116075	54307	81540	139290	65169	97848
GC8-P2600	69404	32472	48755	92539	43296	65007	115673	54119	81258	138808	64943	97510
GC8-P900	78080	36531	54849	104106	48708	73132	130133	60884	91415			
GC8-P2650	81453	38109	57219	108605	50812	76292	135756	63515	95366			
GC8-P2700	94467	44198	66361	125956	58930	88481						
GC8-P1000	96395	45100	67715	128526	60133	90287						
GC9-P900	101353	47420	71199	135138	63226	94931	168922	79033	118664	202707	94839	142397
GC9-P2700	122625	57372	86142	163500	76496	114855	204375	95620	143569	245250	114744	172283
GC9-P1000	125128	58543	87900	166837	78057	117199	208546	97571	146499	250255	117085	175799
GC9-P1100	151404	70837	106358	201872	94449	141811	252341	118061	177264			
GC9-P2800	160163	74935	112511	213551	99913	150015	266939	124891	187519			
GC9-P2900	202707	94839	142397	270275	126452	189863						
GC10-P1200	233571	109280	164079	311429	145706	218772	389286	182133	273465	467143	218559	328158
GC10-P1300	274122	128252	192565	365496	171003	256753	456870	213753	320942	548244	256504	385130
GC10-P21100	392530	183651	275744	523373	244868	367659						
GC10-P21200	467143	218559	328158									

Note: 0° is BTO and ETC, 45° is RTO and RTC, 90 is ETO and BTC.

BTS-G Range Pneumatic Actuators

Spring-return torque output
Symmetric yoke configuration

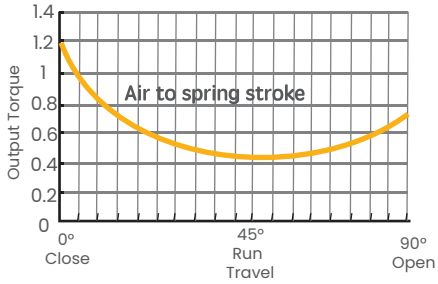

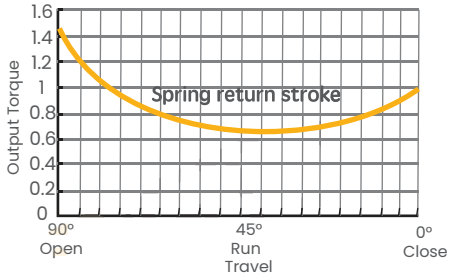

Spring Return Fail Close (FC)

Actuator model	Spring-return torque			Torque outputs at different air supply pressure (Unit:Nm)								
				4 bar			5 bar			6 bar		
	BTC(90°)	RTC(45°)	ETC(0°)	BTO(0°)	RTO(45°)	ETO(90°)	BTO(0°)	RTO(45°)	ETO(90°)	BTO(0°)	RTO(45°)	ETO(90°)
G04-P105 SR4	173	79	101	162	72	90	227	109	155	293	147	221
G04-P105 SR5	234	103	125	140	49	31	207	87	98	273	125	164
G04-P105 SR6	272	122	153				179	68	59	245	106	126
G04-P125 SR4	258	115	144	240	105	126	336	160	222	432	214	318
G04-P125 SR5	306	141	187	201	81	81	298	136	178	395	192	275
G04-P125 SR6	352	166	228				256	111	133	353	167	230
G05-P125 SR4	348	151	178	291	118	122	409	185	239	526	253	357
G05-P125 SR5	408	182	229	240	86	62	358	154	179	475	221	297
G05-P125 SR6	465	213	280				307	123	122	424	190	240
G05-P160 SR4	489	223	292	503	232	307	702	345	506	901	459	704
G05-P160 SR5	682	299	365	430	155	114	629	269	313	828	383	511
G05-P160 SR6	778	354	459				535	215	217	734	329	416
G0-P180 SR4	480	224	304	428	195	253	611	299	436	795	404	619
G0-P180 SR5	582	275	381	352	143	150	535	248	333	718	353	516
G0-P180 SR6	705	336	470				446	188	211	629	292	394
G0-P200 SR4	582	275	381	530	246	329	758	376	556	986	506	784
G0-P200 SR5	705	336	470	441	185	206	669	315	434	896	445	662
G0-P200 SR6	822	403	587				551	248	316	779	378	544
G1-P200 SR4	797	380	531	797	380	531	1129	569	863	1461	759	1195
G1-P200 SR5	996	475	664	664	285	332	996	475	664	1328	664	996
G1-P200 SR6	1345	622	830				830	327	315	1162	517	647
G1-P250 SR4	1345	622	830	1245	565	730	1763	861	1248	2282	1158	1767
G1-P250 SR5	1763	832	1146	928	354	311	1447	651	830	1965	948	1348
G1-P250 SR6	1815	890	1297				1297	593	778	1815	890	1297
G1-P300 SR4	1763	832	1146	1841	876	1224	2588	1303	1971	3335	1730	2718
G1-P300 SR5	2308	1083	1480	1508	625	679	2255	1052	1426	3002	1479	2173
G1-P300 SR6	2614	1281	1867				1867	854	1120	2614	1281	1867
G2-P300 SR4	2336	1114	1560	2346	1120	1571	3323	1679	2548	4300	2237	3524
G2-P300 SR5	3218	1501	2032	1875	733	689	2851	1291	1665	3828	1850	2642
G2-P300 SR6	4061	1883	2526				2358	909	823	3334	1468	1799
G2-P350 SR4	3218	1501	2032	3285	1540	2099	4615	2300	3429	5944	3060	4758
G2-P350 SR5	4061	1883	2526	2792	1158	1257	4121	1918	2586	5450	2678	3916
G2-P350 SR6	4701	2240	3134				3513	1561	1946	4842	2321	3275
G3-P350 SR4	3670	1729	2377	3566	1669	2273	5052	2519	3759	6537	3369	5245
G3-P350 SR5	4683	2231	3120	2823	1167	1260	4309	2017	2745	5794	2866	4231
G3-P350 SR6	5979	2833	3930				3499	1415	1449	4985	2264	2935
G3-P400 SR4	4683	2231	3120	4642	2208	3079	6583	3317	5020	8523	4427	6960
G3-P400 SR5	5979	2833	3930	3833	1606	1783	5773	2715	3723	7714	3825	5664
G3-P400 SR6	7268	3352	4455				5248	2197	2435	7189	3307	4376
G3-P450 SR4	5979	2833	3930	5894	2785	3845	8350	4189	6301	10806	5593	8757
G3-P450 SR5	7406	3391	4455	5370	2227	2418	7826	3631	4874	10282	5035	7330

Actuator model	Spring-return torque			Torque outputs at different air supply pressure (Unit:Nm)								
				4 bar			5 bar			6 bar		
	BTC(90°)	RTC(45°)	ETC(0°)	BTO(0°)	RTO(45°)	ETO(90°)	BTO(0°)	RTO(45°)	ETO(90°)	BTO(0°)	RTO(45°)	ETO(90°)
G3-P450 SR6	9096	4335	6064				6216	2687	3184	8672	4092	5640
G4-P450 SR4	6661	3194	4509	6763	3252	4611	9581	4864	7429	12399	6475	10247
G4-P450 SR5	8217	3976	5690	5582	2469	3055	8400	4081	5873	11218	5692	8691
G4-P450 SR6	9426	4548	6480				7609	3509	4664	10427	5120	7482
G4-P500 SR4	8217	3976	5690	8226	3981	5699	11705	5971	9178	15184	7960	12657
G4-P500 SR5	9426	4548	6480	7435	3410	4490	10914	5399	7969	14393	7388	11448
G4-P500 SR6	12274	5801	8016				9379	4146	5121	12858	6135	8600
G4-P550 SR4	9426	4548	6480	10358	5081	7412	14567	7488	11622	18777	9895	15831
G4-P550 SR5	12274	5801	8016	8823	3828	4564	13032	6235	8774	17242	8642	12983
G4-P550 SR6	14528	6875	9518				11529	5160	6520	15739	7568	10729
G5-P550 SR4	14013	6496	8706	13693	6313	8387	19293	9515	13987	24893	12717	19586
G5-P550 SR5	16736	7608	9873	12526	5201	5663	18126	8403	11263	23726	11605	16863
G5-P550 SR6	21418	10273	14513				13486	5738	6581	19086	8940	12181
G5-P600 SR4	16736	7608	9873	16784	7635	9921	23448	11446	16585	30113	15257	23249
G5-P600 SR5	20802	9444	12228	14429	5800	5855	21093	9610	12519	27758	13421	19183
G5-P600 SR6	27465	12684	16897				16425	6371	5856	23089	10181	12521
G5-P700 SR4	21846	10396	14513	21770	10352	14437	30841	15539	23508	39912	20726	32579
G5-P700 SR5	27465	12684	16897	19387	8064	8818	28457	13251	17889	37528	18438	26960
G5-P700 SR6	30801	14463	19785				25570	11472	14553	34640	16659	23623
G7-P700 SR4	25876	12156	16640	27150	12885	17914	38097	19145	28862	49045	25405	39809
G7-P700 SR5	31847	15366	21895	21895	9675	11943	32843	15935	22890	43790	22195	33838
G7-P700 SR6	42429	19564	25998				28740	11737	12309	39687	17997	23257
G7-P800 SR4	31847	15366	21895	35300	17340	25348	49599	25517	39647	63898	33693	53946
G7-P800 SR5	42429	19564	25998	31197	13142	14767	45496	21319	29066	59795	29495	43364
G7-P800 SR6	51576	24060	32575				38920	16823	19918	53218	24999	34217
G8-P1000 SR4	59453	28025	38564	67656	32716	46767	94211	47901	73322	120766	63086	99877
G8-P1000 SR5	77275	35761	47799	58421	24979	28945	84976	40164	55500	111531	55349	82055
G8-P1000 SR6	92942	45555	66387				66387	30370	39832	92942	45555	66387
G8-P800 SR4	40540	19032	26024	41957	19842	27440	58952	29560	44435	75947	39279	61431
G8-P800 SR5	51942	23686	30900	37080	15188	16039	54076	24906	33034	71071	34624	50029
G8-P800 SR6	60344	28280	38564				46412	20313	24632	63407	30031	41627
G8-P900 SR4	50429	23254	30900	55138	25946	35609	76647	38246	57118	98157	50546	78628
G8-P900 SR5	59453	28025	38564	47474	21175	26585	68984	33475	48095	90493	45775	69604
G8-P900 SR6	77275	35761	47799				59749	25739	30273	81258	38039	51782
G9-P1000 SR4	81236	37539	50059	87823	41306	56646	122293	61017	91116	156763	80729	125586
G9-P1000 SR5	100102	46509	62564	75318	32336	37780	109788	52048	72250	144259	71759	106720
G9-P1000 SR6	125128	57242	75077				97275	41315	47224	131746	61026	81695
G9-P1100 SR4	100102	46509	62564	104273	48894	66735	145982	72745	108444	187691	96595	150153
G9-P1100 SR5	125128	57242	75077	91760	38161	41709	133469	62012	83418	175179	85863	125128
G9-P1100 SR6	145982	71552	104273				104273	47701	62564	145982	71552	104273
G9-P900 SR4	65894	30416	40485	71199	33449	45790	99120	49415	73711	127041	65382	101633
G9-P900 SR5	81236	37539	50059	61625	26325	30448	89546	42292	58369	117467	58258	86290
G9-P900 SR6	100102	46509	62564				77041	33322	39503	104962	49288	67424
G10-P1100 SR4	140575	61835	75694	140575	61835	75694	194643	92753	129762	248710	123670	183829
G10-P1100 SR5	162202	74202	97321	118948	49468	54067	173016	80386	108135	227083	111303	162202
G10-P1100 SR6	189236	89661	124355				145982	64927	81101	200050	95845	135169
G10-P1200 SR4	167296	73589	90083	167296	73589	90083	231641	110384	154427	295986	147178	218772
G10-P1200 SR5	193034	88307	115821	141558	58871	64345	205903	95666	128689	270248	132460	193034
G10-P1200 SR6	225207	106704	147993				173731	77268	96517	238076	114063	160862
G10-P1300 SR4	196341	86365	105722	196341	86365	105722	271857	129547	181238	347372	172730	256753
G10-P1300 SR5	226547	103638	135928	166135	69092	75516	241650	112274	151031	317166	155457	226547
G10-P1300 SR6	264305	125229	173686				203892	90683	113274	279408	133866	188789
G10-P1400 SR4	227709	100163	122612	227709	100163	122612	315289	150244	210193	402870	200326	297773
G10-P1400 SR5	262741	120195	157645	192677	80130	87580	280257	130212	175161	367837	180293	262741
G10-P1400 SR6	306531	145236	201435				236467	105171	131371	324047	155252	218951

Actuator model	Spring-return torque			Torque outputs at different air supply pressure (Unit:Nm)								
				4 bar			5 bar			6 bar		
	BTO(0°)	RTO(45°)	ETO(90°)	BTC(90°)	RTC(45°)	ETC(0°)	BTC(90°)	RTC(45°)	ETC(0°)	BTC(90°)	RTC(45°)	ETC(0°)
G3-P450 SR6	9096	4335	6064				6216	2687	3184	8672	4092	5640
G4-P450 SR4	6661	3194	4509	6763	3252	4611	9581	4864	7429	12399	6475	10247
G4-P450 SR5	8217	3976	5690	5582	2469	3055	8400	4081	5873	11218	5692	8691
G4-P450 SR6	9426	4548	6480				7609	3509	4664	10427	5120	7482
G4-P500 SR4	8217	3976	5690	8226	3981	5699	11705	5971	9178	15184	7960	12657
G4-P500 SR5	9426	4548	6480	7435	3410	4490	10914	5399	7969	14393	7388	11448
G4-P500 SR6	12274	5801	8016				9379	4146	5121	12858	6135	8600
G4-P550 SR4	9426	4548	6480	10358	5081	7412	14567	7488	11622	18777	9895	15831
G4-P550 SR5	12274	5801	8016	8823	3828	4564	13032	6235	8774	17242	8642	12983
G4-P550 SR6	14528	6875	9518				11529	5160	6520	15739	7568	10729
G5-P550 SR4	14013	6496	8706	13693	6313	8387	19293	9515	13987	24893	12717	19586
G5-P550 SR5	16736	7608	9873	12526	5201	5663	18126	8403	11263	23726	11605	16863
G5-P550 SR6	21418	10273	14513				13486	5738	6581	19086	8940	12181
G5-P600 SR4	16736	7608	9873	16784	7635	9921	23448	11446	16585	30113	15257	23249
G5-P600 SR5	20802	9444	12228	14429	5800	5855	21093	9610	12519	27758	13421	19183
G5-P600 SR6	27465	12684	16897				16425	6371	5856	23089	10181	12521
G5-P700 SR4	21846	10396	14513	21770	10352	14437	30841	15539	23508	39912	20726	32579
G5-P700 SR5	27465	12684	16897	19387	8064	8818	28457	13251	17889	37528	18438	26960
G5-P700 SR6	30801	14463	19785				25570	11472	14553	34640	16659	23623
G7-P700 SR4	25876	12156	16640	27150	12885	17914	38097	19145	28862	49045	25405	39809
G7-P700 SR5	31847	15366	21895	21895	9675	11943	32843	15935	22890	43790	22195	33838
G7-P700 SR6	42429	19564	25998				28740	11737	12309	39687	17997	23257
G7-P800 SR4	31847	15366	21895	35300	17340	25348	49599	25517	39647	63898	33693	53946
G7-P800 SR5	42429	19564	25998	31197	13142	14767	45496	21319	29066	59795	29495	43364
G7-P800 SR6	51576	24060	32575				38920	16823	19918	53218	24999	34217
G8-P1000 SR4	59453	28025	38564	67656	32716	46767	94211	47901	73322	120766	63086	99877
G8-P1000 SR5	77275	35761	47799	58421	24979	28945	84976	40164	55500	111531	55349	82055
G8-P1000 SR6	92942	45555	66387				66387	30370	39832	92942	45555	66387
G8-P800 SR4	40540	19032	26024	41957	19842	27440	58952	29560	44435	75947	39279	61431
G8-P800 SR5	51942	23686	30900	37080	15188	16039	54076	24906	33034	71071	34624	50029
G8-P800 SR6	60344	28280	38564				46412	20313	24632	63407	30031	41627
G8-P900 SR4	50429	23254	30900	55138	25946	35609	76647	38246	57118	98157	50546	78628
G8-P900 SR5	59453	28025	38564	47474	21175	26585	68984	33475	48095	90493	45775	69604
G8-P900 SR6	77275	35761	47799				59749	25739	30273	81258	38039	51782
G9-P1000 SR4	81236	37539	50059	87823	41306	56646	122293	61017	91116	156763	80729	125586
G9-P1000 SR5	100102	46509	62564	75318	32336	37780	109788	52048	72250	144259	71759	106720
G9-P1000 SR6	125128	57242	75077				97275	41315	47224	131746	61026	81695
G9-P1100 SR4	100102	46509	62564	104273	48894	66735	145982	72745	108444	187691	96595	150153
G9-P1100 SR5	125128	57242	75077	91760	38161	41709	133469	62012	83418	175179	85863	125128
G9-P1100 SR6	145982	71552	104273				104273	47701	62564	145982	71552	104273
G9-P900 SR4	65894	30416	40485	71199	33449	45790	99120	49415	73711	127041	65382	101633
G9-P900 SR5	81236	37539	50059	61625	26325	30448	89546	42292	58369	117467	58258	86290
G9-P900 SR6	100102	46509	62564				77041	33322	39503	104962	49288	67424
G10-P1100 SR4	140575	61835	75694	140575	61835	75694	194643	92753	129762	248710	123670	183829
G10-P1100 SR5	162202	74202	97321	118948	49468	54067	173016	80386	108135	227083	111303	162202
G10-P1100 SR6	189236	89661	124355				145982	64927	81101	200050	95845	135169
G10-P1200 SR4	167296	73589	90083	167296	73589	90083	231641	110384	154427	295986	147178	218772
G10-P1200 SR5	193034	88307	115821	141558	58871	64345	205903	95666	128689	270248	132460	193034
G10-P1200 SR6	225207	106704	147993				173731	77268	96517	238076	114063	160862
G10-P1300 SR4	196341	86365	105722	196341	86365	105722	271857	129547	181238	347372	172730	256753
G10-P1300 SR5	226547	103638	135928	166135	69092	75516	241650	112274	151031	317166	155457	226547
G10-P1300 SR6	264305	125229	173686				203892	90683	113274	279408	133866	188789
G10-P1400 SR4	227709	100163	122612	227709	100163	122612	315289	150244	210193	402870	200326	297773
G10-P1400 SR5	262741	120195	157645	192677	80130	87580	280257	130212	175161	367837	180293	262741
G10-P1400 SR6	306531	145236	201435				236467	105171	131371	324047	155252	218951

BTS-G Range Rneumatic Actuators

Spring Return Torque Output
Canted Yoke Configuration

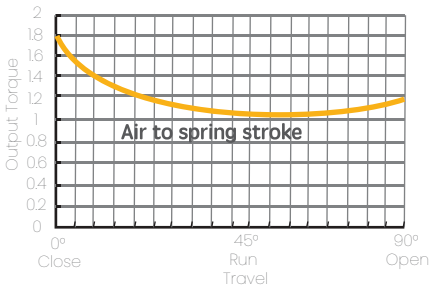

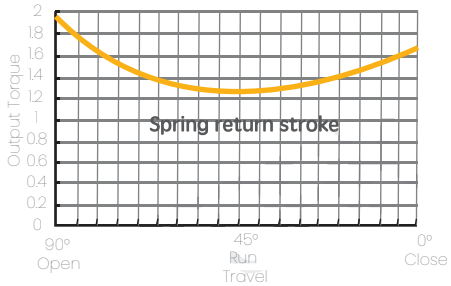

Spring Return Fail Close (FC)

Actuator model	Spring-return torque			Torque outputs at different air supply pressure (Unit:Nm)								
				4 bar			5 bar			6 bar		
	BTC(90°)	RTC(45°)	ETC(0°)	BTO(0°)	RTO(45°)	ETO(90°)	BTO(0°)	RTO(45°)	ETO(90°)	BTO(0°)	RTO(45°)	ETO(90°)
GC0-P180 SR4	489	272	463	463	176	182	695	288	350	927	400	518
GC0-P180 SR5	603	336	572	355	112	68	586	225	236	818	337	403
GC0-P180 SR6	704	403	715				675	269	303	907	382	471
GC0-P200 SR4	603	336	572	572	218	225	858	356	432	1144	494	639
GC0-P200 SR5	704	403	715	429	150	125	715	289	332	1001	427	539
GC0-P200 SR6	804	470	858				858	360	438	1144	498	646
GC1-P200 SR4	852	475	808	808	307	318	1213	503	611	1617	699	904
GC1-P200 SR5	1151	622	1010	606	160	19	1010	356	312	1415	551	605
GC1-P200 SR6	1151	622	1010				1415	551	605	1819	747	897
GC1-P250 SR4	1510	832	1396	1130	390	320	1762	695	777	2393	1001	1234
GC1-P250 SR5	1554	890	1579	947	332	275	1579	638	733	2210	943	1190
GC1-P250 SR6	1976	1083	1802				1988	750	768	2619	1055	1225
GC1-P300 SR4	1976	1083	1802	1836	676	658	2745	1116	1316	3655	1556	1975
GC1-P300 SR5	2238	1281	2273	1364	478	396	2273	918	1055	3183	1358	1713
GC1-P300 SR6	2557	1495	2728				2728	1145	1394	3638	1584	2052
GC2-P300 SR4	2755	1519	2552	2205	782	690	3394	1357	1551	4583	1932	2412
GC2-P300 SR5	3476	1883	3075	1681	418	-31	2871	993	830	4060	1568	1691
GC2-P300 SR6	4024	2240	3816				3319	1211	1143	4508	1787	2004
GC2-P350 SR4	3476	1883	3075	3399	1249	1212	5018	2032	2385	6636	2815	3557
GC2-P350 SR5	4024	2240	3816	2659	892	664	4277	1675	1836	5896	2458	3008
GC2-P350 SR6	4552	2661	4856				4856	2037	2481	6475	2820	3653
GC3-P350 SR4	4009	2231	3799	3437	1269	1231	5246	2144	2541	7055	3019	3851
GC3-P350 SR5	5118	2833	4785	2451	667	122	4261	1542	1432	6070	2417	2742
GC3-P350 SR6	5118	2833	4785				6070	2417	2742	7879	3292	4052
GC3-P400 SR4	5118	2833	4785	4667	1739	1726	7029	2882	3437	9392	4025	5148
GC3-P400 SR5	6221	3352	5424	4027	1220	623	6390	2363	2334	8753	3506	4045
GC3-P400 SR6	7787	4335	7384				6793	2523	2479	9156	3666	4190
GC3-P450 SR4	6221	3352	5424	6538	2435	2441	9529	3881	4606	12519	5328	6772
GC3-P450 SR5	7787	4335	7384	4578	1452	875	7569	2898	3041	10559	4345	5206
GC3-P450 SR6	8410	4916	8971				8971	3764	4583	11962	5210	6749
GC4-P450 SR4	7034	3976	6928	6796	2663	2904	10228	4322	5389	13659	5982	7874
GC4-P450 SR5	8069	4548	7891	5834	2091	1870	9265	3751	4354	12697	5411	6839
GC4-P450 SR6	10507	5801	9760				10827	4157	4401	14259	5817	6886
GC4-P500 SR4	8069	4548	7891	9054	3648	4201	13290	5697	7268	17526	7746	10336
GC4-P500 SR5	10507	5801	9760	7184	2395	1763	11420	4444	4830	15656	6493	7898
GC4-P500 SR6	12437	6875	11590				13826	5419	5968	18062	7468	9036

Actuator model	Spring-return torque			Torque outputs at different air supply pressure (Unit:Nm)								
				4 bar			5 bar			6 bar		
	BTC(90°)	RTC(45°)	ETC(0°)	BTO(0°)	RTO(45°)	ETO(90°)	BTO(0°)	RTO(45°)	ETO(90°)	BTO(0°)	RTO(45°)	ETO(90°)
GC4-P550 SR4	10507	5801	9760	10743	4116	4340	15868	6596	8051	20994	9075	11763
GC4-P550 SR5	12437	6875	11590	8913	3042	2410	14038	5522	6122	19164	8001	9833
GC4-P550 SR6	15010	8594	15250				15504	6282	7260	20630	8761	10972
GC5-P550 SR4	14046	7514	12022	15252	5679	5704	22071	8977	10641	28889	12275	15579
GC5-P550 SR5	17975	10153	17672	9602	3040	1775	16421	6338	6712	23239	9636	11650
GC5-P550 SR6	23050	12530	20574				20337	7260	6575	27156	10558	11512
GC5-P600 SR4	17458	9327	14889	17569	6373	6046	25684	10299	11922	33798	14224	17798
GC5-P600 SR5	23050	12530	20574	11885	3171	454	19999	7096	6330	28114	11021	12206
GC5-P600 SR6	25850	14291	24090				24597	9260	9406	32712	13186	15282
GC5-P700 SR4	23050	12530	20574	23606	8841	8942	34650	14183	16940	45695	19526	24937
GC5-P700 SR5	25850	14291	24090	20089	7080	6141	31134	12422	14139	42179	17765	22137
GC5-P700 SR6	31060	18155	33134				33134	13901	16928	44179	19244	24925
GC7-P700 SR4	27262	15366	26660	26660	10426	11348	39990	16874	21001	53320	23322	30653
GC7-P700 SR5	36320	19564	31656	21664	6228	2290	34994	12676	11943	48324	19124	21595
GC7-P700 SR6	46475	24836	39663				40316	13852	11441	53646	20300	21094
GC7-P800 SR4	36320	19564	31656	37987	14123	14110	55397	22545	26717	72808	30967	39325
GC7-P800 SR5	46475	24836	39663	29979	8851	3955	47389	17273	16563	64800	25695	29170
GC7-P800 SR6	48961	28618	52232				52232	21913	26684	69642	30335	39291
GC8-P1000 SR4	68196	36444	58201	71134	26118	25460	103468	41759	48874	135802	57399	72288
GC8-P1000 SR5	79562	45555	80835	48501	17007	14094	80835	32648	37508	113168	48288	60922
GC8-P1000 SR6	90928	52388	93768				100235	41455	49556	132569	57096	72970
GC8-P800 SR4	43169	23254	37625	45150	16786	16770	65843	26796	31755	86537	36806	46740
GC8-P800 SR5	50894	28025	46956	35818	12015	9046	56512	22025	24031	77206	32035	39016
GC8-P800 SR6	68196	36444	58201				65961	23616	21714	86655	33626	36699
GC8-P900 SR4	50894	28025	46956	57805	22651	24968	83996	35320	43933	110186	47989	62898
GC8-P900 SR5	68196	36444	58201	46561	14231	7665	72751	26900	26631	98942	39569	45596
GC8-P900 SR6	79562	45555	80835				76308	30458	34230	102498	43127	53195
GC9-P1000 SR4	85691	46509	76179	91708	34702	35882	133680	55005	66275	175652	75307	96668
GC9-P1000 SR5	107114	57242	91415	76473	23969	14459	118444	44272	44852	160416	64574	75245
GC9-P1000 SR6	124966	71552	126965				124866	50264	57393	166838	70567	87786
GC9-P1100 SR4	107114	57242	91415	111729	41023	39989	162515	65590	76765	213301	90156	113540
GC9-P1100 SR5	124966	71552	126965	76179	26713	22137	126965	51279	58913	177751	75845	95688
GC9-P1100 SR6	149959	83478	142200				162515	63920	70695	213301	88486	107471
GC9-P900 SR4	69541	37539	60953	75036	28241	28933	109033	44686	53551	143030	61132	78170
GC9-P900 SR5	85691	46509	76179	59810	19272	12783	93807	35717	37401	127804	52162	62020
GC9-P900 SR6	107114	57242	91415				112568	41429	40597	146566	57874	65215
GC10-P1100 SR4	138851	74202	118500	144834	53178	51838	210667	85023	99510	276501	116869	147182
GC10-P1100 SR5	161993	89661	151417	111917	37719	28696	177751	69565	76368	243584	101410	124040
GC10-P1100 SR6	194391	108212	184334				144834	51014	43969	210667	82859	91642
GC10-P1200 SR4	165244	88307	141025	172364	63287	61691	250712	101185	118425	329059	139083	175159
GC10-P1200 SR5	192785	106704	180199	133191	44889	34150	211538	82788	90884	289885	120686	147618
GC10-P1200 SR6	231342	128781	219373				172364	60711	52327	250712	98609	109061
GC10-P1300 SR4	193932	103638	165509	202289	74274	72401	294238	118752	138985	386187	163230	205568
GC10-P1300 SR5	226255	125229	211483	156314	52683	40079	248263	97161	106663	340213	141638	173246
GC10-P1300 SR6	271505	151139	257458				202289	71251	61412	294238	115729	127995
GC10-P1400 SR4	224916	120195	191951	234607	86140	83969	341246	137724	161190	447886	189308	238411
GC10-P1400 SR5	262402	145236	245271	181287	61099	46483	287927	112683	123704	394566	164267	200925
GC10-P1400 SR6	314882	175285	298591				234607	82634	71223	341246	134218	148444

BTS-G Range Rneumatic Actuators

Spring Return Torque Output
Canted Yoke Configuration

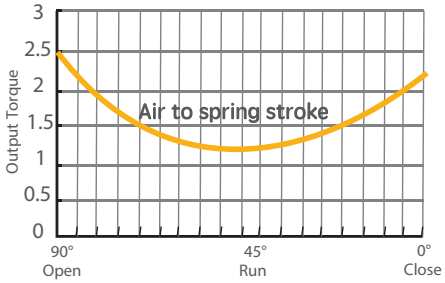

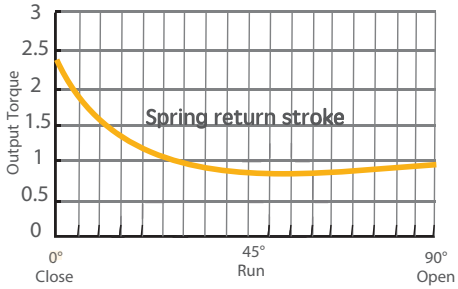

Spring Return Fail Open (FO)

Actuator model	Spring-return torque			Torque outputs at different air supply pressure (Unit:Nm)								
				4 bar			5 bar			6 bar		
	BTO(0°)	RTO(45°)	ETO(90°)	BTC(90°)	RTC(45°)	ETC(0°)	BTC(90°)	RTC(45°)	ETC(0°)	BTC(90°)	RTC(45°)	ETC(0°)
GC0-P180 SR4	374	174	264	616	274	396	837	386	589	1057	498	781
GC0-P180 SR5	452	218	349	532	230	317	752	342	510	972	455	702
GC0-P180 SR6	561	272	440				661	288	402	881	400	594
GC0-P200 SR4	452	218	349	739	336	498	1010	474	735	1282	612	973
GC0-P200 SR5	561	272	440	647	281	390	919	420	627	1191	558	865
GC0-P200 SR6	692	336	544				815	356	496	1087	494	734
GC1-P200 SR4	652	304	461	1075	478	691	1460	674	1027	1844	869	1362
GC1-P200 SR5	782	380	615	922	402	561	1306	598	896	1690	793	1232
GC1-P200 SR6	978	475	768				1152	503	701	1536	699	1037
GC1-P250 SR4	978	475	768	1632	747	1120	2233	1053	1645	2833	1358	2170
GC1-P250 SR5	1321	622	960	1440	600	778	2040	906	1302	2641	1211	1827
GC1-P250 SR6	1732	832	1327				1674	695	891	2274	1001	1416
GC1-P300 SR4	1321	622	960	2497	1138	1701	3361	1578	2456	4225	2018	3212
GC1-P300 SR5	1732	832	1327	2130	928	1290	2994	1367	2045	3859	1807	2801
GC1-P300 SR6	2267	1083	1712				2609	1116	1510	3473	1556	2265
GC2-P300 SR4	1968	914	1381	3139	1387	1984	4269	1962	2971	5399	2537	3959
GC2-P300 SR5	2498	1174	1806	2715	1127	1453	3845	1703	2441	4975	2278	3429
GC2-P300 SR6	3160	1519	2425				3225	1357	1779	4355	1932	2767
GC2-P350 SR4	2498	1174	1806	4347	1958	2880	5885	2741	4224	7424	3524	5569
GC2-P350 SR5	3160	1519	2425	3727	1612	2218	5266	2395	3563	6804	3178	4907
GC2-P350 SR6	3987	1883	2923				4768	2032	2735	6307	2815	4080
GC3-P350 SR4	2918	1359	2063	4814	2141	3093	6533	3016	4596	8252	3891	6098
GC3-P350 SR5	3604	1729	2751	4126	1771	2407	5845	2646	3910	7564	3522	5413
GC3-P350 SR6	4599	2231	3610				4986	2144	2915	6705	3019	4417
GC3-P400 SR4	3604	1729	2751	6231	2843	4247	8477	3986	6210	10722	5129	8173
GC3-P400 SR5	4599	2231	3610	5372	2341	3252	7617	3484	5215	9862	4627	7177
GC3-P400 SR6	5871	2833	4547				6680	2882	3942	8926	4025	5905
GC3-P450 SR4	4599	2231	3610	7757	3555	5337	10599	5002	7821	13441	6448	10306
GC3-P450 SR5	5871	2833	4547	6821	2953	4065	9663	4400	6549	12504	5846	9033
GC3-P450 SR6	7136	3352	5154				9055	3881	5284	11897	5328	7768
GC4-P450 SR4	5017	2479	4122	8921	4160	6383	12181	5819	9233	15442	7479	12083
GC4-P450 SR5	6540	3194	5217	7826	3445	4860	11086	5105	7710	14347	6765	10560
GC4-P450 SR6	8069	3976	6584				9719	4322	6182	12980	5982	9032
GC4-P500 SR4	6540	3194	5217	10885	5003	7534	14911	7052	11053	18936	9101	14571
GC4-P500 SR5	8069	3976	6584	9518	4220	6006	13544	6269	9525	17569	8318	13043
GC4-P500 SR6	9256	4548	7499				12629	5697	8337	16655	7746	11856

Actuator model	Spring-return torque			Torque outputs at different air supply pressure (Unit:Nm)								
				4 bar			5 bar			6 bar		
	BTO(0°)	RTO(45°)	ETO(90°)	BTC(90°)	RTC(45°)	ETC(0°)	BTC(90°)	RTC(45°)	ETC(0°)	BTC(90°)	RTC(45°)	ETC(0°)
GC4-P550 SR4	8069	3976	6584	12900	5941	8962	17771	8421	13219	22642	10900	17477
GC4-P550 SR5	9256	4548	7499	11985	5370	7774	16856	7849	12032	21727	10328	16289
GC4-P550 SR6	12052	5801	9275				15080	6596	9236	19951	9075	13493
GC5-P550 SR4	10741	5202	8397	17522	7991	11914	24002	11289	17577	30481	14587	23241
GC5-P550 SR5	13490	6417	10074	15845	6776	9165	22325	10074	14829	28804	13372	20492
GC5-P550 SR6	16112	7514	11424				20974	8977	12207	27454	12275	17870
GC5-P600 SR4	13490	6417	10074	20772	9284	13471	28483	13209	20212	36194	17134	26952
GC5-P600 SR5	16112	7514	11424	19421	8186	10849	27133	12112	17589	34844	16037	24330
GC5-P600 SR6	20026	9327	14149				24408	10299	13675	32119	14224	20416
GC5-P700 SR4	16112	7514	11424	30560	13856	20585	41056	19199	29759	51552	24541	38934
GC5-P700 SR5	20619	10153	16794	25191	11217	16078	35687	16560	25253	46183	21902	34427
GC5-P700 SR6	26440	12530	19551				32929	14183	19431	43425	19526	28606
GC7-P700 SR4	18668	9115	14891	35780	16677	25622	48447	23125	36694	61115	29573	47767
GC7-P700 SR5	25409	12156	19255	31416	13636	18881	44083	20084	29953	56751	26532	41026
GC7-P700 SR6	31273	15366	25335				38003	16874	24090	50671	23322	35162
GC7-P800 SR4	25409	12156	19255	46927	21531	32439	63473	29953	46901	80018	38375	61363
GC7-P800 SR5	31273	15366	25335	40847	18322	26575	57392	26743	41037	73938	35165	55499
GC7-P800 SR6	41663	19564	30083				52645	22545	30647	69190	30967	45109
GC8-P1000 SR4	49519	23254	35756	87154	39309	57913	117881	54949	84771	148609	70590	111629
GC8-P1000 SR5	58380	28025	44623	78286	34538	49052	109014	50178	75910	139741	65819	102768
GC8-P1000 SR6	78227	36444	55309				98328	41759	56063	129055	57399	82921
GC8-P800 SR4	33377	15549	23599	55064	24490	35379	74729	34500	52569	94395	44510	69758
GC8-P800 SR5	37170	18263	30113	48549	21776	31587	68215	31786	48776	87880	41796	65965
GC8-P800 SR6	49519	23254	35756				62572	26796	36426	82238	36806	53615
GC8-P900 SR4	37170	18263	30113	69444	32412	49850	94333	45081	71605	119222	57750	93360
GC8-P900 SR5	49519	23254	35756	63801	27422	37501	88690	40091	59256	113580	52760	81010
GC8-P900 SR6	58380	28025	44623				79823	35320	50395	104712	47989	72150
GC9-P1000 SR4	64704	30416	46847	112699	50795	74750	152586	71098	109614	192472	91401	144478
GC9-P1000 SR5	79770	37539	57924	101622	43671	59685	141508	63974	94549	181395	84277	129412
GC9-P1000 SR6	98295	46509	72394				127039	55005	76023	166925	75307	110887
GC9-P1100 SR4	79770	37539	57924	135126	60726	88970	183389	85292	131156	231652	109858	173341
GC9-P1100 SR5	98295	46509	72394	120657	51756	70445	168919	76322	112630	217182	100889	154815
GC9-P1100 SR6	122869	57242	86873				154441	65590	88056	202703	90156	130241
GC9-P900 SR4	54834	25546	38770	90463	40235	58124	122771	56680	86364	155079	73125	114603
GC9-P900 SR5	64704	30416	46847	82386	35365	48254	114694	51810	76494	147002	68255	104733
GC9-P900 SR6	79770	37539	57924				103616	44686	61428	135924	61132	89668
GC10-P1100 SR4	106183	49468	75075	175176	77912	112554	237739	109758	167238	300301	141603	221923
GC10-P1100 SR5	138038	63381	93844	156407	63999	80699	218970	95845	135384	281532	127690	190068
GC10-P1100 SR6	159275	74202	112613				200201	85023	114147	262764	116869	168831
GC10-P1200 SR4	126367	58871	89346	208474	92722	133949	282928	130621	199028	357383	168519	264106
GC10-P1200 SR5	164277	73589	104237	193583	78004	96039	268038	115903	161118	342492	153801	226196
GC10-P1200 SR6	189550	88307	134019				238256	101185	135844	312710	139083	200923
GC10-P1300 SR4	148305	69092	104857	244667	108820	157204	332048	153298	233581	419429	197776	309958
GC10-P1300 SR5	192797	86365	122333	227191	91547	112712	314572	136025	189089	401953	180503	265467
GC10-P1300 SR6	222458	103638	157286				279619	118752	159428	367000	163230	235806
GC10-P1400 SR4	171999	80130	121610	283756	126205	182319	385097	177789	270899	486438	229373	359478
GC10-P1400 SR5	223599	100163	141878	263487	106173	130719	364829	157757	219299	466170	209340	307878
GC10-P1400 SR6	257999	120195	182414				324292	137724	184899	425634	189308	273479

Overall Dimensions

Double-acting configuraion(Symmetric/Canted Yoke)

Double Acting - Single cylinder

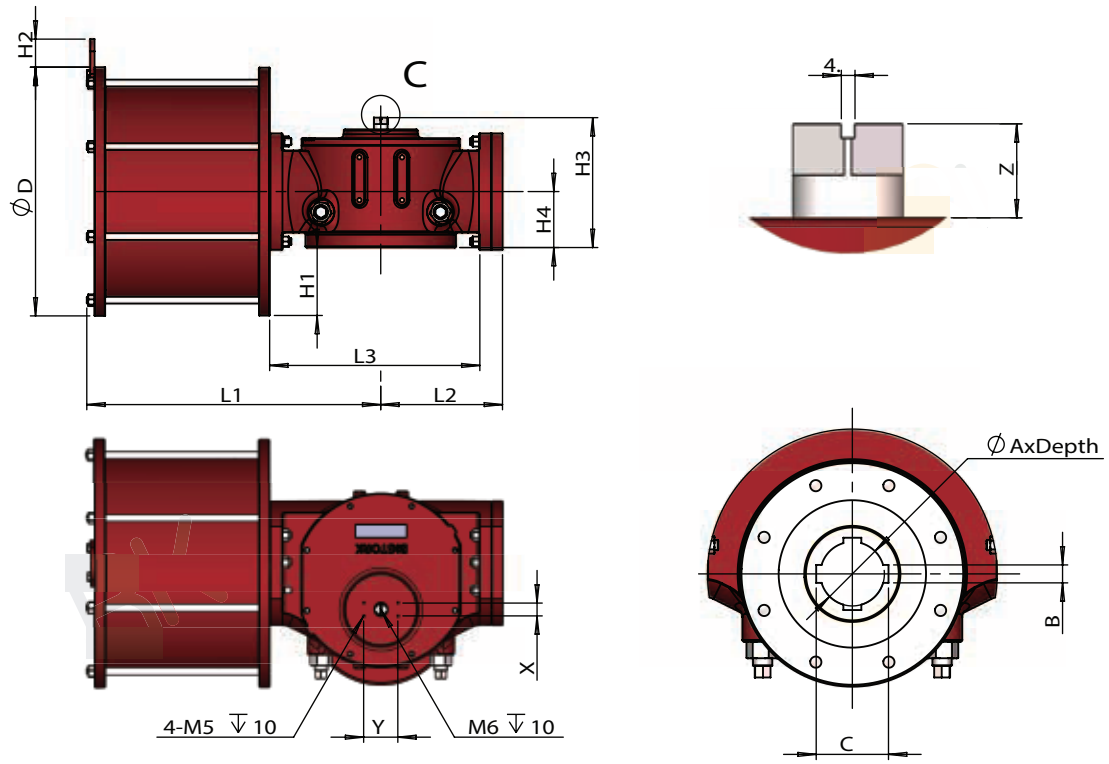

Double Acting - Double cylinders

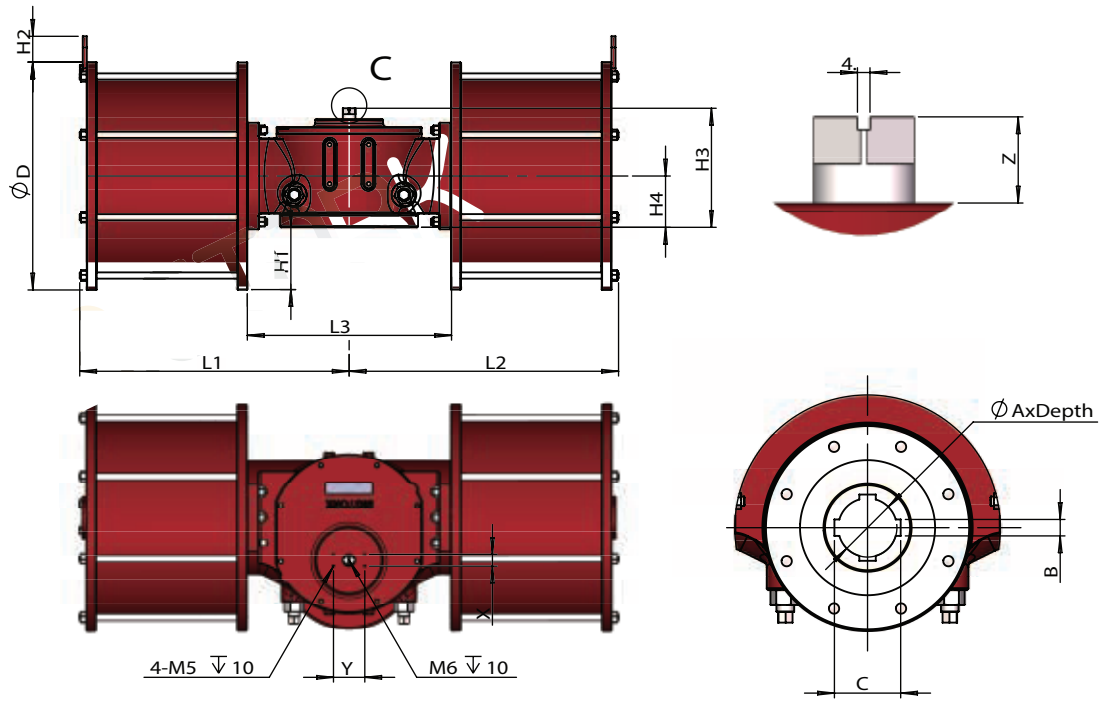

Double-acting Scotch Yoke Actuator - Overall Dimensions

Unit: mm

MODEL	D	L	L1	L2	L3	H1	H2	H3	H4	A*Depth	B	C	X * Y * Z	Flanges to ISO5211	Pipe/Port Size to air supply
G0-P180	230	486	350	136	240	40	31	179	75	Φ36x60	10	42.6	30x80x20	F12/F10	G3/8"
G0-P200	250	486	350	136	240	40	31	179	75	Φ36x60	10	42.6	30x80x20	F12/F10	G1/2"
G1-P200	225	635	460	175	334	25	81	202	88	Φ40x60	12	46.6	30x80x20	F12	G1/2"
G1-P250	280	678	503	175	334	52	71	202	88	Φ40x60	12	46.6	30x80x20	F14	G1/2"
G1-P300	330	691	516	175	334	77	86	202	88	Φ40x60	12	46.6	30x80x20	F14	G1/2"
G2-P300	330	800	593	207	398	67	86	217	98	Φ50x70	14	57.6	30x80x20	F16	G1/2"
G2-P350	420	785	578	207	398	107	83	217	98	Φ50x70	14	57.6	30x80x20	F16	G1/2"
G3-P350	425	851	618	233	445	103	70	247	110	Φ60x90	18	68.8	30x130x30	F25/F16	G1/2"
G3-P400	475	851	618	233	445	128	70	247	110	Φ60x90	18	68.8	30x130x30	F25/F16	G1/2"
G3-P450	525	851	618	233	445	153	70	247	110	Φ60x90	18	68.8	30x130x30	F25/F16	G3/4"
G4-P450	525	1010	730	280	520	132	72	294	131	Φ80x120	22	90.8	30x130x30	F30/F25	G3/4"
G4-P500	580	1010	730	280	520	159	72	294	131	Φ80x120	22	90.8	30x130x30	F30/F25	G3/4"
G4-P550	630	1010	730	280	520	184	72	294	131	Φ80x120	22	90.8	30x130x30	F30/F25	G1"
G5-P500	580	1160	798	362	655	133	72	355	157	Φ98x150	28	110.8	30x130x30	F35/F30	G3/4"
G5-P550	630	1160	798	362	655	158	72	355	157	Φ98x150	28	110.8	30x130x30	F35/F30	G1"
G5-P600	680	1160	798	362	655	183	72	355	157	Φ98x150	28	110.8	30x130x30	F35/F30	G1"
G5-P2500	580	1596	798	798	655	133	72	355	157	Φ98x150	28	110.8	30x130x30	F35/F30	G3/4"
G7-P600	703	1467	1040	427	830	158	109	416	194	Φ120x180	32	134.8	30x130x30	F40	G1"
G7-P700	803	1467	1040	427	830	208	109	416	194	Φ120x180	32	134.8	30x130x30	F40	2-G1"
G7-P2500	580	2080	1040	1040	830	96	72	416	194	Φ120x180	32	134.8	30x130x30	F40	G3/4"
G7-P750	853	2080	1040	1040	830	233	109	416	194	Φ120x180	32	134.8	30x130x30	F40	2-G1"
G7-P2550	630	2080	1040	1040	830	121	109	416	194	Φ120x180	32	134.8	30x130x30	F40	G1"
G7-P800	913	1467	1040	427	830	263	109	416	194	Φ120x180	32	134.8	30x130x30	F40	2-G1"
G8-P2550	630	2416	1208	1208	940	152	100	466	220	Φ160x200	40	178.8	30x130x30	F48/F40	G1"
G8-P800	950	1739	1253	486	940	256	100	466	220	Φ160x200	40	178.8	30x130x30	F48/F40	2-G1"
G8-P850	1000	1669	1208	461	940	282	100	466	220	Φ160x200	40	178.8	30x130x30	F48/F40	2-G1"
G8-P2600	680	2416	1208	1208	940	182	100	466	220	Φ160x200	40	178.8	30x130x30	F48/F40	G1"
G8-P900	1050	1739	1253	486	940	306	100	466	220	Φ160x200	40	178.8	30x130x30	F48/F40	2-G1"
G8-P2650	730	2416	1208	1208	940	208	100	466	220	Φ160x200	40	178.8	30x130x30	F48/F40	G1"
G8-P2700	803	2416	1208	1208	940	232	100	466	220	Φ160x200	40	178.8	30x130x30	F48/F40	2-G1"
G8-P1000	1130	1739	1253	486	940	346	110	466	220	Φ160x200	40	178.8	30x130x30	F48/F40	3-G1"
G9-P900	1050	2014	1414	600	1080	276	100	502	249	Φ220x250	50	242.8	30x130x30	F60/F48	2-G1"
G9-P2700	803	2828	1414	1414	1080	153	100	502	249	Φ220x250	50	242.8	30x130x30	F60/F48	2-G1"
G9-P1000	1130	2014	1414	600	1080	316	100	502	249	Φ220x250	50	242.8	30x130x30	F60/F48	3-G1"
G9-P1100	1250	2014	1414	600	1080	376	100	502	249	Φ220x250	50	242.8	30x130x30	F60/F48	3-G1"
G9-P2800	950	2828	1414	1414	1080	226	100	502	249	Φ220x250	50	242.8	30x130x30	F60/F48	2-G1"
G9-P2900	1050	2828	1414	1414	1080	276	100	502	249	Φ220x250	50	242.8	30x130x30	F60/F48	2-G1"
G10-P1200	1350	2350	1650	700	1400	365	100	570	310	Φ280x320	63	304.8	30x130x30	F80	4-G1"
G10-P1300	1450	2350	1650	700	1400	415	100	570	310	Φ280x320	63	304.8	30x130x30	F80	4-G1"
G10-P21100	1250	3300	1650	1650	1400	315	100	570	310	Φ280x320	63	304.8	30x130x30	F80	3-G1"
G10-P21200	1350	3300	1650	1650	1400	365	100	570	310	Φ280x320	63	304.8	30x130x30	F80	4-G1"

* Sizes can be customized according to customer needs
* The canted type and symmetrical type dimensions are basically the same
* L=L1+L2
* There are two F standard specifications, and the ISO 5211 flange positioning stop port is non-standard, please pay attention to check.

Overall Dimensions

Spring-return configuration (Symmetric/Canted Yoke)

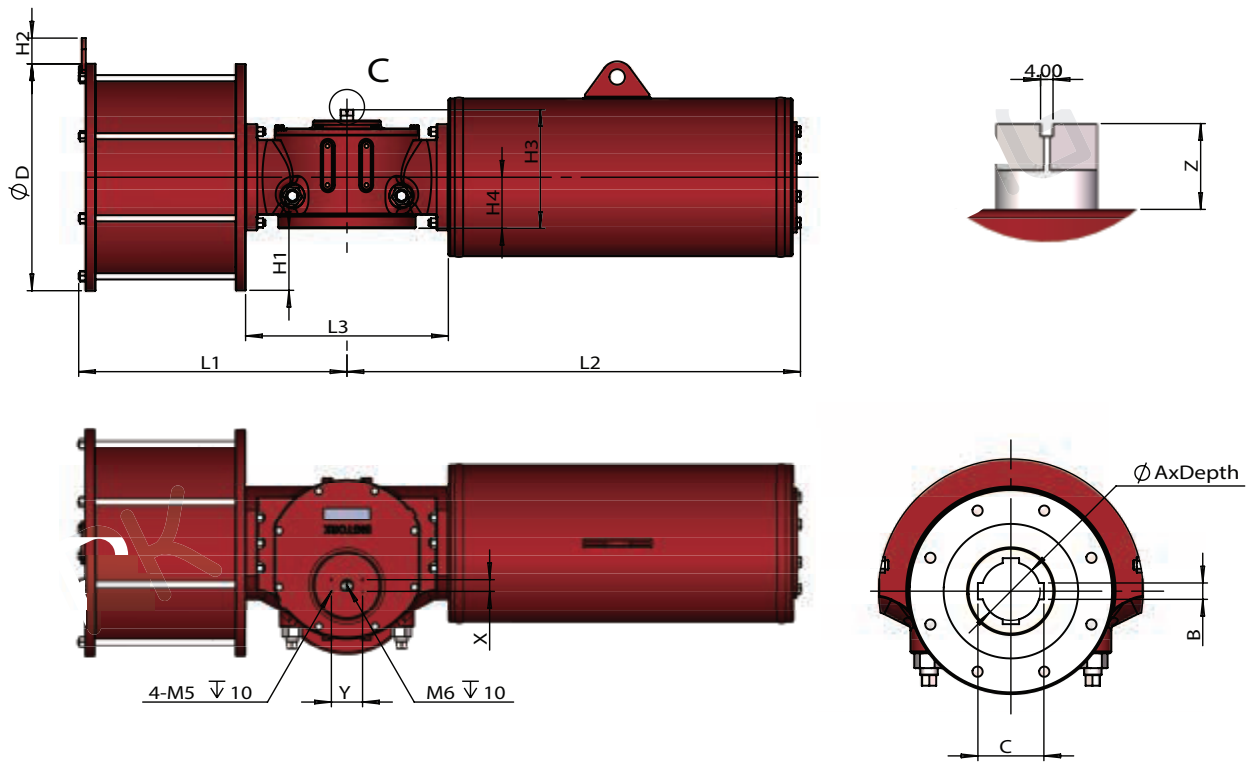

Specification overall dimension (Double/single action)

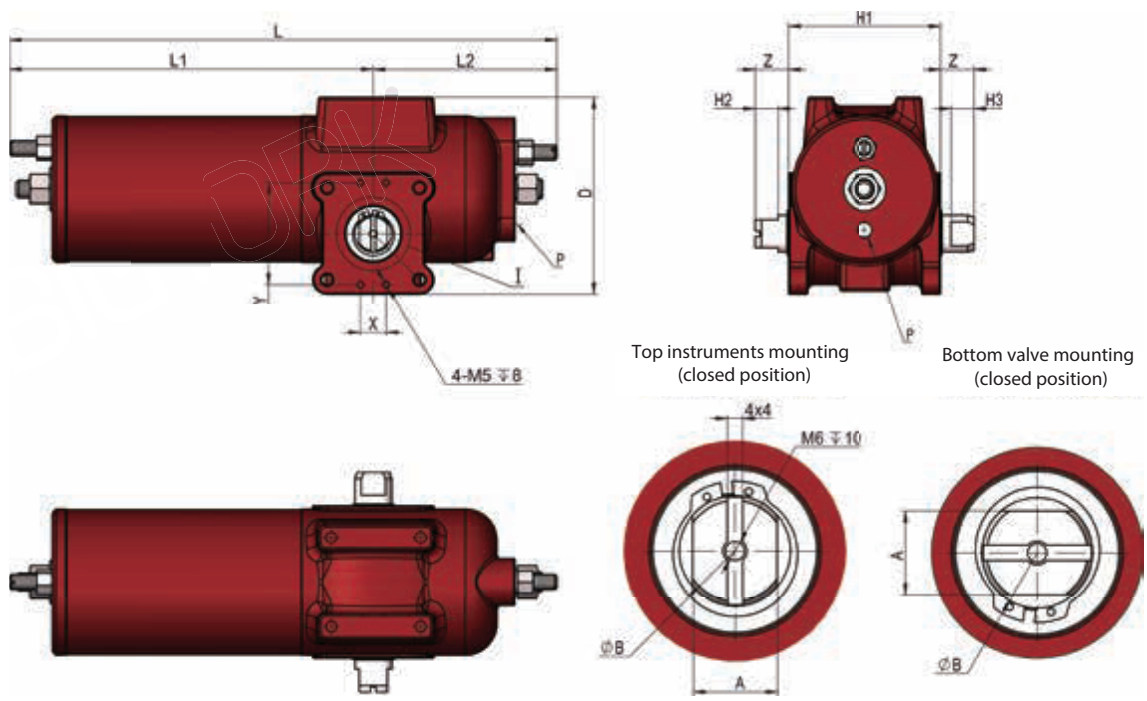

Spring-return Scotch Yoke Actuator - Overall Dimensions

Unit: mm

MODEL	D	L	L1	L2	L3	H1	H2	H3	H4	A*Depth	B	C	X * Y * Z	Flanges to ISO5211	Pipe/Port Size to air supply
G0-P180 SR	230	230	350	537	240	40	31	179	75	Φ36x60	10	42.6	30x80x20	F12/F10	G3/8"
G0-P200 SR	262	262	350	589	240	56	31	179	75	Φ36x60	10	42.6	30x80x20	F12/F10	G1/2"
G1-P200 SR	225	225	460	709	334	25	81	202	88	Φ40x60	12	46.6	30x80x20	F14	G1/2"
G1-P250 SR	280	280	503	709	334	52	71	202	88	Φ40x60	12	46.6	30x80x20	F14	G1/2"
G1-P300 SR	330	330	516	709	334	77	86	202	88	Φ40x60	12	46.6	30x80x20	F14	G1/2"
G2-P300 SR	330	330	593	869	398	67	86	217	98	Φ50x70	14	57.6	30x80x20	F16	G1/2"
G2-P350 SR	420	420	578	869	398	107	83	217	98	Φ50x70	14	57.6	30x80x20	F16	G1/2"
G3-P350 SR	425	425	618	1022	445	103	70	247	110	Φ60x90	18	68.8	30x130x30	F25/F16	G1/2"
G3-P400 SR	475	475	618	1022	445	128	70	247	110	Φ60x90	18	68.8	30x130x30	F25/F16	G1/2"
G3-P450 SR	525	525	618	1022	445	153	70	247	110	Φ60x90	18	68.8	30x130x30	F25/F16	G3/4"
G4-P450 SR	525	525	730	1174	520	132	72	294	131	Φ80x120	22	90.8	30x130x30	F30/F25	G3/4"
G4-P500 SR	580	580	730	1174	520	159	72	294	131	Φ80x120	22	90.8	30x130x30	F30/F25	G3/4"
G4-P550 SR	630	630	730	1174	520	184	72	294	131	Φ80x120	22	90.8	30x130x30	F30/F25	G1"
G5-P550 SR	630	630	798	1385	655	158	72	355	157	Φ98x150	28	110.8	30x130x30	F35/F30	G1"
G5-P600 SR	680	680	798	1385	655	183	72	355	157	Φ98x150	28	110.8	30x130x30	F35/F30	G1"
G5-P700 SR	780	780	798	1705	655	233	72	355	157	Φ98x150	28	110.8	30x130x30	F35/F30	2-G1"
G7-P700 SR	803	803	1040	1938	830	208	109	416	194	Φ120x180	32	134.8	30x130x30	F40	2-G1"
G7-P800 SR	913	913	1040	2098	830	263	109	416	194	Φ120x180	32	134.8	30x130x30	F40	2-G1"
G8-P800 SR	950	950	1253	2345	940	256	100	466	220	Φ160x200	40	178.8	30x130x30	F48/F40	2-G1"
G8-P900 SR	1050	1050	1253	2345	940	306	100	466	220	Φ160x200	40	178.8	30x130x30	F48/F40	2-G1"
G8-P1000 SR	1130	1130	1253	2345	940	346	100	466	220	Φ160x200	40	178.8	30x130x30	F48/F40	3-G1"
G9-P900 SR	1050	1050	1414	2627	1080	276	100	502	249	Φ220x250	50	242.8	30x130x30	F60/48	2-G1"
G9-P1000 SR	1130	1130	1414	2627	1080	316	100	502	249	Φ220x250	50	242.8	30x130x30	F60/48	3-G1"
G9-P1100 SR	1250	1250	1414	2627	1080	376	100	502	249	Φ220x250	50	242.8	30x130x30	F60/48	3-G1"
G10-P1100 SR	1250	1250	1650	3600	1400	315	100	570	310	Φ280x320	63	304.8	30x130x30	F80	3-G1"
G10-P1200 SR	1350	1350	1650	3600	1400	365	100	570	310	Φ280x320	63	304.8	30x130x30	F80	4-G1"
G10-P1300 SR	1450	1450	1650	3800	1400	415	100	570	310	Φ280x320	63	304.8	30x130x30	F80	4-G1"
G10-P1400 SR	1550	1550	1650	4000	1400	465	100	570	310	Φ280x320	63	304.8	30x130x30	F80	4-G1"

* Sizes can be customized according to customer needs
* The canted type and symmetrical type dimensions are basically the same
L=L1+L2
There are two F standard specifications,and the ISO 5211 flange positioning stop port is non-standard, please pay attention to check.

Specification Outline Size Table

Unit: mm

MODEL	D	L	L1	L2	L3	H1	H2	H3	H4	A	B	C	X * Y * Z	Connecting flange ISO5211	P Air source interface
G04-P105 DA	155	430	290	140		120	20	20		22	Φ29		30x80x22	F10	G3/8"
G04-P125 DA	155	430	290	140		120	20	20		22	Φ29		30x80x22	F10	G3/8"
G05-P125 DA	190	485	330	155		146	28	28		27	Φ38		30x80x30	F12/F10	G3/8"
G05-P160 DA	190	495	340	155		146	28	28		27	Φ38		30x80x30	F12/F10	G3/8"
G04-P105 SR	155	553	413	140		120	20	20		22	Φ29		30x80x22	F10	G3/8"
G04-P125 SR	155	563	423	140		120	20	20		22	Φ29		30x80x22	F10	G3/8"
G05-P125 SR	190	680	525	155		146	28	28		27	Φ38		30x80x30	F12/F10	G3/8"
G05-P160 SR	190	690	535	155		146	28	28		27	Φ38		30x80x30	F12/F10	G3/8"

* For G04/G05 specifications, there is no ISO 5211 flange mounting interface. Please pay attention to confirm.

Connecting Dimension to Panel

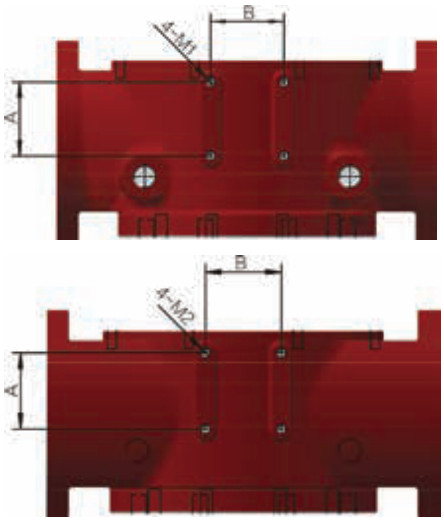

Centrebody Size	A	B	M1	M2
G04	70	70	/	4-M10
G05	70	70	/	4-M10
G0/GC0	70	55	4-M8	4-M8
G1/GC1	80	80	4-M12	4-M12
G2/GC2	80	80	4-M12	4-M12
G3/GC3	100	100	4-M12	4-M12
G4/GC4	100	100	4-M12	4-M12
G5/GC5	100	100	4-M12	4-M12
G7/GC7	100	100	4-M12	8-M12
G8/GC8	100	100	4-M12	8-M12
G9/GC9	100	100	4-M12	8-M12
G10/GC10	100	100	4-M12	8-M12

Air Consumption Volume

Acting Double

MODEL	Air consumption volume (L)
G04-105 DA	7.5
G04-125 DA	11.0
G05-125 DA	11.4
G05-160 DA	21.7
G0-P180 DA	6.2
G0-P200 DA	7.7
G1-P200 DA	10.1
G1-P250 DA	14.6
G1-P300 DA	21.1
G2-P300 DA	26.3
G2-P350 DA	35.9
G3-P350 DA	42.4
G3-P400 DA	55.5
G3-P450 DA	70.3
G4-P450 DA	86.1
G4-P500 DA	106.4
G4-P550 DA	128.9
G5-P500 DA	133.6
G5-P550 DA	161.8
G5-P600 DA	192.8
G5-P2500 DA	262.7
G7-P600 DA	238.3
G7-P700 DA	325.1

MODEL	Air consumption volume (L)
G7-P2500 DA	325.1
G7-P750 DA	373.5
G7-P2550 DA	404.1
G7-P800 DA	425.2
G8-P2550 DA	474.4
G8-P800 DA	499.2
G8-P850 DA	564.0
G8-P2600 DA	564.0
G8-P900 DA	632.7
G8-P2650 DA	661.2
G8-P2700 DA	766.2
G8-P1000 DA	781.8
G9-P900 DA	853.1
G9-P2700 DA	1033.4
G9-P1000 DA	1054.5
G9-P1100 DA	1277.0
G9-P2800 DA	1347.9
G9-P2900 DA	1704.0
G10-P1200 DA	1971
G10-P1300 DA	2314
G10-P21100 DA	3293
G10-P21200 DA	3963

Single-Return

MODEL	Air consumption volume (L)
G04-105SR	5.5
G04-125SR	8.0
G05-125SR	9.4
G05-160SR	15.7
G0-P180 SR	3.1
G1-P200 SR	4.6
G1-P200SR	5.6
G1-P250 SR	7.2
G1-P300 SR	10.5
G2-P300 SR	13.1
G2-P350 SR	17.9
G3-P350 SR	21.0
G3-P400 SR	27.5
G3-P450 SR	34.9
G4-P450 SR	42.8
G4-P500 SR	52.9

MODEL	Air consumption volume (L)
G4-P550 SR	64.2
G5-P550 SR	80.5
G5-P600 SR	96.0
G5-P700 SR	130.9
G7-P700 SR	168.2
G7-P800 SR	211.6
G8-P800 SR	248.0
G8-P900 SR	314.7
G8-P1000 SR	389.3
G9-P900 SR	423.9
G9-P1000 SR	524.6
G9-P1100 SR	635.9
G10-P1100SR	824
G10-P1200 SR	982
G10-P1300SR	1154
G10-P1400 SR	1339

Note: 1. The double-acting air consumption is the total air consumption of the open and close travel
2. Canted type air consumption is basically the same as symmetrical type.

Model Number Designation

BTS - GO - P 180 - SR 4 - SM - FC - ST

Centrebody Size

GO	G04-G10(Symmetric Yoke Configuration)
	GC0-GC10(Canted Yoke Configuration)

Power Supply Type

P	P: Pneumatic
	H: Hydraulic

Cylinder Size

180	105-1400 (Single Cylinder)
	2500-21200(Double Cylinders)

Cylinder Configuration

SR	DA: Double-Acting
	SR: Spring-Return

Spring Code

4	3# Module
	4# Module
	5# Module
	6# Module
	7# Module

Manual Override Type

SM	N: Without manual override
	SM1: Side-mounted handwheel
	SM2: Side-mounted handwheel
	BGM: Jackscrews
	HY: Hydraulic

Fail Position

FC	FC: Fail Close
	FO: Fail open
	FL: Stay put
	FLC: Stay put(failsafe to close)
	FLO: Stay put(failsafe to Open)

Temperature & Special version

ST	ST: Standard temperature range -20 to +80℃
	HT: High temperature range -20 to 150℃
	LT: Low temperature range -49 to 80℃
	UT: Ultra-low temperature range -60 to 80℃
	HT: High frequency
	C: Customised model
	TX: Special condition design

Example Model Number

BTS-GO-P180-SR4-SM-FC-ST,

BTS: BTS series

G0: Symmetric yoke design

Pneumatic actuator, single cylinder design, cylinder diameter 180mm, single action, 3# spring module

With SM side tie rod manual mechanism, the valve moves in the direction of closing when the air source is faulty, and the working temperature is normal temperature.

Ordering Instructions

Based on a wealth of experience, Elite has the knowledge Based on a wealth of experience, Elite has the knowledge to Based on a wealth of experience, Elite has the knowledge to Elite has the knowledge to provide reliable and appropriate automative solutions for valve provide reliable and appropriate automative solutions for valveprovide reliable and appropriate automative solutions for valve provide reliable and appropriate automative

- Double-acting and spring-return configurations(normally closed and normally open options)
- Solenoid valve type: double-solenoid/single-solenoid, supply voltage, explosionproof type
- Limited switches type: basic/explosionproof type
- Valve positioner type: current signal, air supply signal, electric-pneumatic converters, explosionproof grade
- Air filter & regulator
- Manual gear operator
- Customised solutions
- Accessories of designated brand

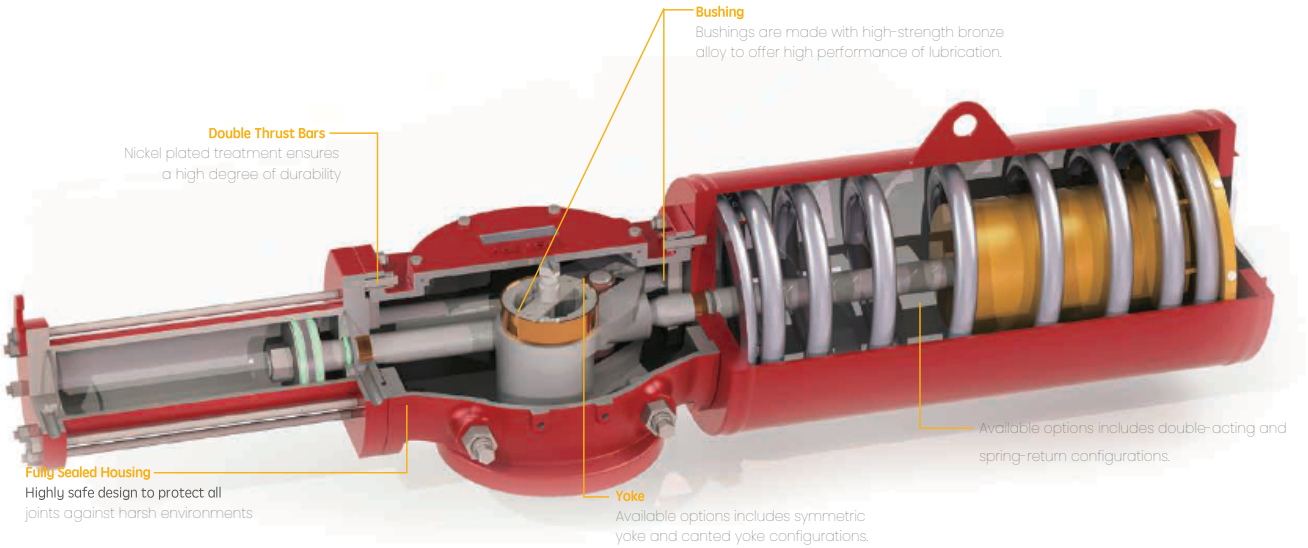

Hydraulic Actuator - Characteristics

BTS-Gxx-H series is designed with a quarter-turn hydraulic actuation configuration, suitable for on-off and moduating valves.
The design and materials ensure optimum performance in the harshest environments, covering the applications on both sea and land.
Elite operates on philosophy to provide Immediate Response, Excellent Quality Services, Quick Delivery and Customer satisfaction followed by our Core Values "What we commit, we deliver" based on this we are having satisfied customers in more than 25 countries and ever expanding throughout the world.
BTS-Gxx-H series features double torque outputs, assured safety and flexibility of mounting various accessories to automatically control the operation of valves.

Hydraulic Actuator

Hydraulic actuator is the type of actuator which can convert the hydraulic fluid into energy to implement preset actions and perform a variety of fuctions.
Hydraulic actuator has compact constructure and features smaller size, lighter weight as well as lower inertia force on the same outputs.

Hydraulic Acturator
Double-acting & Single-cylinder

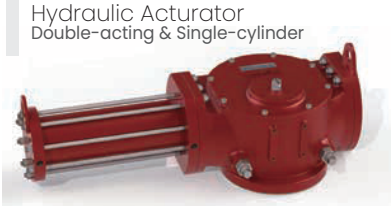

Double-acting actuator with single cylinder is one of the most commonly used configuration among hydraulic actuators. It has the advantages of simple structure and reliable performance.

Hydraulic Acturator
Double-acting & Double-cylinder

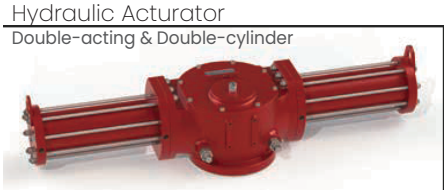

With two hydraulic cylinders on each side, double-acting actuator can deliver twice the torque output and offer reliable performance as its balance of torque outputs during operation.

Hydraulic Acturator
Spring-Return & Double-Cylinder

Spring-return actuators are capable of being fail to open and fail to close in accordance with customer requirements.

Advantages

Extended Life

The processing of grinding with low coefficient of friction, along with chrome plating of cylinders provide high performance and long service life. Yoke is designed with high-strength sealing, enabling that the structure remains stable and undeformed to operate safely and reliably under high torque values.

Modular Design

The BG range products are compact and lightweight. Either symmetrical or canted actuator is designed to offer adequate torque values. Interchangeable power modules and spring sets allow for easy and quick spring resetting without any risks. Hydraulic seals are able to be replaced easily on site by the construction of hydraulic cylinders.

Reliable Safety

Spring modules with welded carbon steel housing ensure high efficiency as well as maintenance activities that can be performed safely with no unexpected operation caused by corrosion of the vbolts.

High Efficiency

The inner surface of the housing is coated with a waterproof layer for high quality corrosion protection. Carefuly selected materials as well as the surface treatment offer high performance to resist wear and prevent torque loss during service life. All parts that require threaded connection allow thread to be rotated in position. Stroke between 85 and 95 degree is available to be adjusted.

Hydraulic Acturator Parts & Materials

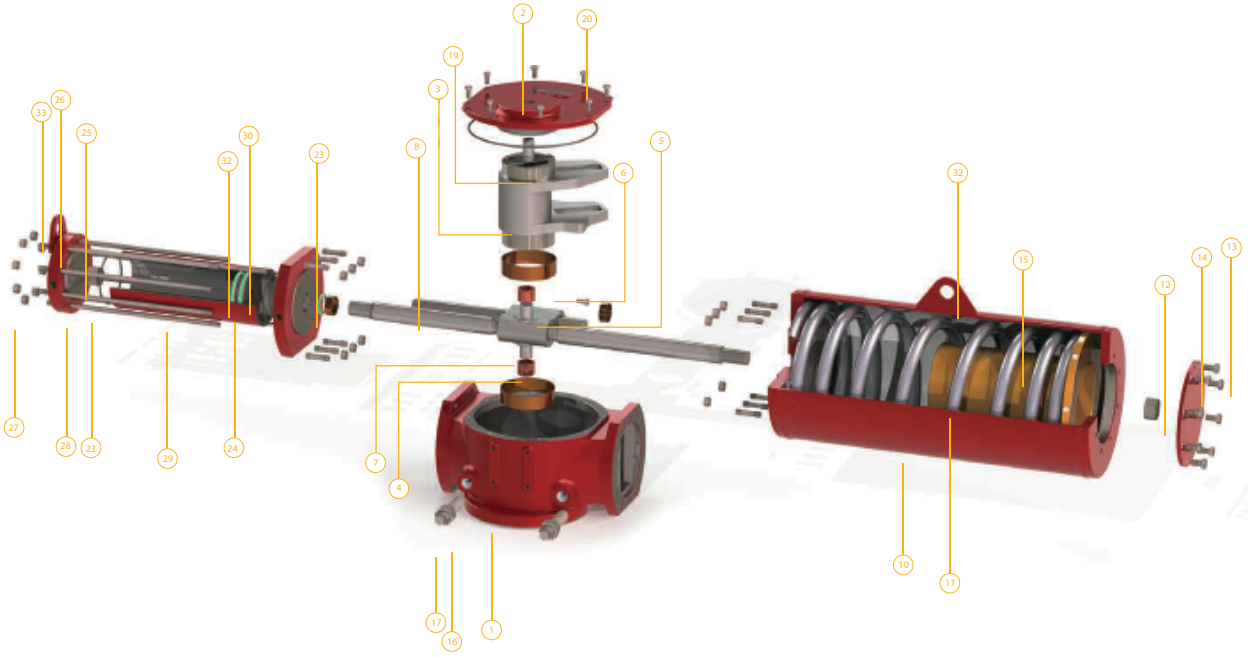

1 Centrebody
Ductile iron

2 Centrebody cover
Ductile iron

3 Yoke
Carbon steel

4 Bearing
Bearing steel

5 Sliding bushing
Bearing steel

6 Oilless bearing
Composites

7 Sliding block
Carbon steel

8 Thrust bar
Alloy steel(chromium plated)

9 Connecting rod
Alloy steel(chromium plated)

10 Spring cartridge
Carbon steel

11 Spring base
Carbon steel

12 Stop screw
Carbon steel

13 Hexagon bolt
Carbon steel

14 Spring cover
Carbon steel

15 Spring
Alloy steel

16 Adjustable bolt
Carbon steel

17 Nut
Carbon steel

18 Rob bushing
Composites

19 Accessory-mounted shaft
Stainless steel

20 Hexagon bolt
Carbon steel

21 Inner cover
Stainless steel

22 Rob bushing
Composites

23 O-ring
NBR

24 O-ring
NBR

25 Nut
Carbon steel

26 End flange
Carbon steel

27 Nut
Carbon steel

28 Stud bolt
Carbon steel

39 Cylinder
Carbon steel(Inside nickel-plated)

30 Piston
Ductile iron

31 O-ring
NBR

32 Sliding ring
Composites

33 Lifting Point
Carbon steel

Corrosion Protection Class

Corrosion level	Undercoat			Topcoat			Durability
	Type	Coating Number	Thickness(μm)	Type	Coating Number	Thickness(μm)	
Moderate corrosion-C3	Epoxy	1	60	Polyurethane	2-3	120	L/M/H
Strong corrosion-C4	Epoxy	1	60	Polyurethane	2-4	160	L/M/H
Extreme corrosion (Industrial-grade)C5-1	Epoxy	1-2	80	Polyurethane	3-4	240	L/M/H
Extreme corrosion (Marine-grade)C5-M	Epoxy	1-2	80	Polyurethane	3-4	320	L/M/H

Paint is applied on the basis of the operating environments and service life of BG range actuators.
The above chart is in accordance with corrosion protection standard ISO12944.

BTS-G Range Hydraulic Acturators

Double-Acting Torque Output

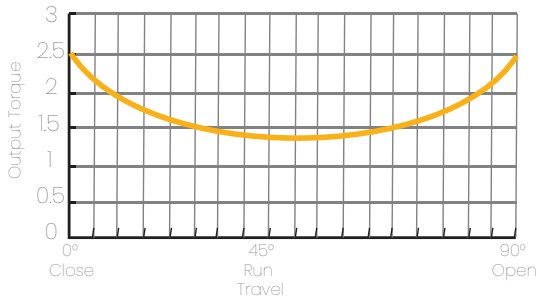

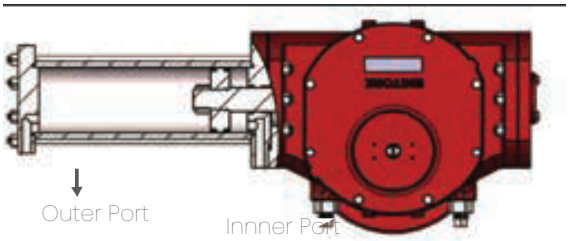

Symmetric Yoke Configuration

Actuator model	Oil inlet	Torque outputs at different oil supply pressure (Unit:Nm)											
		60 barG			80 barG			100 barG			160 barG		
		0°	45	90°	0°	45°	90°	0°	45°	90°	0°	45°	90°
G0-H32	Outer port	361	206	361	481	275	481	601	344	601	962	550	962
G0-H32	Innner port	220	126	220	293	168	293	366	210	366	586	335	586
G0-H40	Outer port	564	322	564	752	430	752	940	537	940	1503	860	1503
G0-H40	Innner port	423	242	423	564	322	564	705	403	705	1128	645	1128
G0-H50	Outer port	881	504	881	1175	672	1175						
G0-H50	Innner port	661	378	661	881	504	881						
G1-H40	Outer port	797	456	797	1062	607	1062	1328	759	1328	2124	1215	2124
G1-H40	Innner port	597	342	597	797	456	797	996	569	996	1593	911	1593
G1-H50	Outer port	1245	712	1245	1660	949	1660	2075	1186	2075	3319	1898	3319
G1-H50	Innner port	934	534	934	1245	712	1245	1556	890	1556	2490	1424	2490
G1-H63	Outer port	1976	1130	1976	2635	1507	2635	3294	1883	3294			
G1-H63	Innner port	1665	952	1665	2220	1269	2220	2775	1587	2775			
G2-H50	Outer port	1628	931	1628	2170	1241	2170	2713	1551	2713	4341	2482	4341
G2-H50	Innner port	1221	698	1221	1628	931	1628	2035	1164	2035	3256	1862	3256
G2-H63	Outer port	2584	1478	2584	3446	1970	3446	4307	2463	4307	6891	3941	6891
G2-H63	Innner port	2177	1245	2177	2903	1660	2903	3629	2075	3629	5806	3320	5806
G2-H80	Outer port	4167	2383	4167	5556	3177	5556	6945	3971	6945			
G2-H80	Innner port	3581	2048	3581	4775	2730	4775	5968	3413	5968			
G2-H100	Outer port	6511	3723	6511	8681	4964	8681						
G2-H100	Innner port	5713	3267	5713	7618	4356	7618						
G3-H2050	Outer port	3184	1821	3184	4245	2427	4245	5306	3034	5306	8490	4855	8490
G3-H2050	Innner port	3184	1821	3184	4245	2427	4245	5306	3034	5306	8490	4855	8490
G3-H63	Outer port	2888	1652	2888	3851	2202	3851	4814	2753	4814	7702	4404	7702

Actuator model	Oil inlet	Torque outputs at different oil supply pressure (Unit:Nm)											
		60 barG			80 barG			100 barG			160 barG		
		0°	45	90°	0°	45°	90°	0°	45°	90°	0°	45°	90°
G3-H63	Innner port	2233	1277	2233	2978	1703	2978	3722	2128	3722	5956	3406	5956
G3-H80	Outer port	4657	2663	4657	6210	3551	6210	7762	4439	7762	12420	7102	12420
G3-H80	Innner port	4002	2289	4002	5337	3052	5337	6671	3815	6671	10673	6103	10673
G3-H100	Outer port	7277	4161	7277	9703	5548	9703	12128	6935	12128			
G3-H100	Innner port	6386	3652	6386	8514	4869	8514	10643	6086	10643			
G3-H120	Outer port	11370	6502	11370	15161	8669	15161						
G3-H120	Innner port	10206	5836	10206	13608	7782	13608						
G4-H2063	Outer port	5292	3026	5292	7056	4035	7056	8820	5043	8820	14112	8070	14112
G4-H2063	Innner port	5292	3026	5292	7056	4035	7056	8820	5043	8820	14112	8070	14112
G4-H100	Outer port	8349	4775	8349	11133	6366	11133	13916	7958	13916	22265	12732	22265
G4-H100	Innner port	6262	3581	6262	8349	4775	8349	10437	5968	10437	16699	9549	16699
G4-H2080	Outer port	9936	5682	9936	13248	7576	13248	16560	9469	16560			
G4-H2080	Innner port	9936	5682	9936	13248	7576	13248	16560	9469	16560			
G4-H120	Outer port	13046	7460	13046	17395	9947	17395	21743	12434	21743			
G4-H120	Innner port	10959	6267	10959	14612	8355	14612	18265	10444	18265			
G4-H140	Outer port	16365	9358	16365	21820	12477	21820						
G4-H140	Innner port	14278	8164	14278	19037	10886	19037						
G5-H100	Outer port	11107	6351	11107	14810	8469	14810	18512	10586	18512	29619	16937	29619
G5-H100	Innner port	8330	4764	8330	11107	6351	11107	13884	7939	13884	22214	12703	22214
G5-H2080	Outer port	13217	7558	13217	17623	10078	17623	22029	12597	22029	35247	20155	35247
G5-H2080	Innner port	13217	7558	13217	17623	10078	17623	22029	12597	22029	35247	20155	35247
G5-H120	Outer port	17355	9924	17355	23140	13232	23140	28925	16540	28925	46280	26464	46280
G5-H120	Innner port	14578	8336	14578	19437	11115	19437	24297	13894	24297	38875	22230	38875
G5-H140	Outer port	21770	12449	21770	29027	16598	29027	36283	20748	36283			
G5-H140	Innner port	18993	10861	18993	25324	14481	25324	31655	18102	31655			
G7-H140	Outer port	26274	15024	26274	35032	20033	35032	43790	25041	43790	70064	40065	70064
G7-H140	Innner port	19706	11268	19706	26274	15024	26274	32843	18781	32843	52548	30049	52548
G7-H2100	Outer port	21984	12571	21984	29313	16762	29313	36641	20952	36641	58625	33524	58625
G7-H2100	Innner port	21984	12571	21984	29313	16762	29313	36641	20952	36641	58625	33524	58625
G7-H2125	Outer port	35323	20199	35323	47097	26932	47097	58871	33664	58871	94194	53863	94194
G7-H2125	Innner port	35323	20199	35323	47097	26932	47097	58871	33664	58871	94194	53863	94194
G7-H2140	Outer port	45980	26293	45980	61306	35057	61306	76633	43821	76633			
G7-H2140	Innner port	45980	26293	45980	61306	35057	61306	76633	43821	76633			

BTS-G Range Hydraulic Acturators

Double-Acting Torque Output

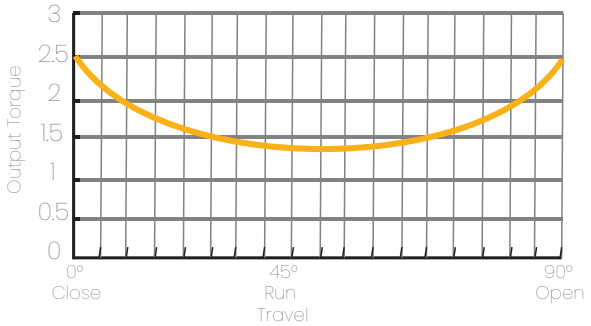

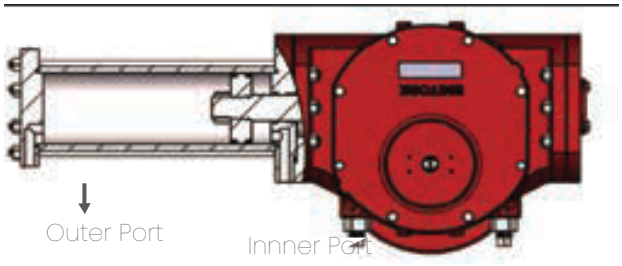

Symmetric Yoke Configuration

Actuator model	Oil inlet	Torque outputs at different oil supply pressure (UnitNm)											
		60 barG			80 barG			100 barG			160 barG		
		0°	45	90°	0°	45°	90°	0°	45°	90°	0°	45°	90°
G0-H32	Outer port	361	206	361	481	275	481	601	344	601	962	550	962
G0-H32	Innner port	220	126	220	293	168	293	366	210	366	586	335	586
G0-H40	Outer port	564	322	564	752	430	752	940	537	940	1503	860	1503
G0-H40	Innner port	423	242	423	564	322	564	705	403	705	1128	645	1128
G0-H50	Outer port	881	504	881	1175	672	1175						
G0-H50	Innner port	661	378	661	881	504	881						
G1-H40	Outer port	797	456	797	1062	607	1062	1328	759	1328	2124	1215	2124
G1-H40	Innner port	597	342	597	797	456	797	996	569	996	1593	911	1593
G1-H50	Outer port	1245	712	1245	1660	949	1660	2075	1186	2075	3319	1898	3319
G1-H50	Innner port	934	534	934	1245	712	1245	1556	890	1556	2490	1424	2490
G1-H63	Outer port	1976	1130	1976	2635	1507	2635	3294	1883	3294			
G1-H63	Innner port	1665	952	1665	2220	1269	2220	2775	1587	2775			
G2-H50	Outer port	1628	931	1628	2170	1241	2170	2713	1551	2713	4341	2482	4341
G2-H50	Innner port	1221	698	1221	1628	931	1628	2035	1164	2035	3256	1862	3256
G2-H63	Outer port	2584	1478	2584	3446	1970	3446	4307	2463	4307	6891	3941	6891
G2-H63	Innner port	2177	1245	2177	2903	1660	2903	3629	2075	3629	5806	3320	5806
G2-H80	Outer port	4167	2383	4167	5556	3177	5556	6945	3971	6945			
G2-H80	Innner port	3581	2048	3581	4775	2730	4775	5968	3413	5968			
G2-H100	Outer port	6511	3723	6511	8681	4964	8681						
G2-H100	Innner port	5713	3267	5713	7618	4356	7618						
G3-H2050	Outer port	3184	1821	3184	4245	2427	4245	5306	3034	5306	8490	4855	8490
G3-H2050	Innner port	3184	1821	3184	4245	2427	4245	5306	3034	5306	8490	4855	8490
G3-H63	Outer port	2888	1652	2888	3851	2202	3851	4814	2753	4814	7702	4404	7702

Actuator model	Oil inlet	Torque outputs at different oil supply pressure (Unit:Nm)											
		60 barG			80 barG			100 barG			160 barG		
		0°	45	90°	0°	45°	90°	0°	45°	90°	0°	45°	90°
G3-H63	Innner port	2233	1277	2233	2978	1703	2978	3722	2128	3722	5956	3406	5956
G3-H80	Outer port	4657	2663	4657	6210	3551	6210	7762	4439	7762	12420	7102	12420
G3-H80	Innner port	4002	2289	4002	5337	3052	5337	6671	3815	6671	10673	6103	10673
G3-H100	Outer port	7277	4161	7277	9703	5548	9703	12128	6935	12128			
G3-H100	Innner port	6386	3652	6386	8514	4869	8514	10643	6086	10643			
G3-H120	Outer port	11370	6502	11370	15161	8669	15161						
G3-H120	Innner port	10206	5836	10206	13608	7782	13608						
G4-H2063	Outer port	5292	3026	5292	7056	4035	7056	8820	5043	8820	14112	8070	14112
G4-H2063	Innner port	5292	3026	5292	7056	4035	7056	8820	5043	8820	14112	8070	14112
G4-H100	Outer port	8349	4775	8349	11133	6366	11133	13916	7958	13916	22265	12732	22265
G4-H100	Innner port	6262	3581	6262	8349	4775	8349	10437	5968	10437	16699	9549	16699
G4-H2080	Outer port	9936	5682	9936	13248	7576	13248	16560	9469	16560			
G4-H2080	Innner port	9936	5682	9936	13248	7576	13248	16560	9469	16560			
G4-H120	Outer port	13046	7460	13046	17395	9947	17395	21743	12434	21743			
G4-H120	Innner port	10959	6267	10959	14612	8355	14612	18265	10444	18265			
G4-H140	Outer port	16365	9358	16365	21820	12477	21820						
G4-H140	Innner port	14278	8164	14278	19037	10886	19037						
G5-H100	Outer port	11107	6351	11107	14810	8469	14810	18512	10586	18512	29619	16937	29619
G5-H100	Innner port	8330	4764	8330	11107	6351	11107	13884	7939	13884	22214	12703	22214
G5-H2080	Outer port	13217	7558	13217	17623	10078	17623	22029	12597	22029	35247	20155	35247
G5-H2080	Innner port	13217	7558	13217	17623	10078	17623	22029	12597	22029	35247	20155	35247
G5-H120	Outer port	17355	9924	17355	23140	13232	23140	28925	16540	28925	46280	26464	46280
G5-H120	Innner port	14578	8336	14578	19437	11115	19437	24297	13894	24297	38875	22230	38875
G5-H140	Outer port	21770	12449	21770	29027	16598	29027	36283	20748	36283			
G5-H140	Innner port	18993	10861	18993	25324	14481	25324	31655	18102	31655			
G7-H140	Outer port	26274	15024	26274	35032	20033	35032	43790	25041	43790	70064	40065	70064
G7-H140	Innner port	19706	11268	19706	26274	15024	26274	32843	18781	32843	52548	30049	52548
G7-H2100	Outer port	21984	12571	21984	29313	16762	29313	36641	20952	36641	58625	33524	58625
G7-H2100	Innner port	21984	12571	21984	29313	16762	29313	36641	20952	36641	58625	33524	58625
G7-H2125	Outer port	35323	20199	35323	47097	26932	47097	58871	33664	58871	94194	53863	94194
G7-H2125	Innner port	35323	20199	35323	47097	26932	47097	58871	33664	58871	94194	53863	94194
G7-H2140	Outer port	45980	26293	45980	61306	35057	61306	76633	43821	76633			
G7-H2140	Innner port	45980	26293	45980	61306	35057	61306	76633	43821	76633			

Actuator model	Oil inlet	Torque outputs at different oil supply pressure (Unit:Nm)											
		60 barG			80 barG			100 barG			160 barG		
		0°	45°	90°	0°	45°	90°	0°	45°	90°	0°	45°	90°
G7-H160	Outer port	34317	19624	34317	45756	26165	45756	57195	32706	57195			
G7-H160	Innner port	27749	15868	27749	36998	21157	36998	46248	26446	46248			
G7-H180	Outer port	43433	24836	43433	57910	33115	57910	72388	41394	72388			
G7-H180	Innner port	36864	21080	36864	49152	28107	49152	61440	35134	61440			
G8-H160	Outer port	40788	23324	40788	54385	31099	54385	67981	38874	67981	108769	62198	108769
G8-H160	Innner port	30591	17493	30591	40788	23324	40788	50986	29155	50986	81577	46648	81577
G8-H2125	Outer port	39593	22641	39593	52791	30188	52791	65989	37735	65989	105583	60376	105583
G8-H2125	Innner port	39593	22641	39593	52791	30188	52791	65989	37735	65989	105583	60376	105583
G8-H180	Outer port	51623	29520	51623	68830	39360	68830	86038	49200	86038	137661	78719	137661
G8-H180	Innner port	41426	23689	41426	55234	31585	55234	69043	39481	69043	110469	63170	110469
G8-H2140	Outer port	52260	29884	52260	69680	39846	69680	87100	49807	87100	139360	79691	139360
G8-H2140	Innner port	52260	29884	52260	69680	39846	69680	87100	49807	87100	139360	79691	139360
G8-H2160	Outer port	71380	40817	71380	95173	54423	95173	118966	68029	118966			
G8-H2160	Innner port	71380	40817	71380	95173	54423	95173	118966	68029	118966			
G8-H200	Outer port	63732	36444	63732	84976	48592	84976	106220	60740	106220	169952	97184	169952
G8-H200	Innner port	53535	30613	53535	71380	40817	71380	89225	51022	89225	142760	81635	142760
G9-H180	Outer port	67010	38319	67010	89347	51092	89347	111684	63865	111684	178695	102184	178695
G9-H180	Innner port	46328	26492	46328	61771	35323	61771	77214	44153	77214	123542	70645	123542
G9-H200	Outer port	82729	47307	82729	110305	63076	110305	137882	78845	137882	220611	126153	220611
G9-H200	Innner port	62047	35480	62047	82729	47307	82729	103411	59134	103411	165458	94614	165458
G9-H220	Outer port	100102	57242	100102	133469	76322	133469	166837	95403	166837	266939	152645	266939
G9-H220	Innner port	79420	45415	79420	105893	60553	105893	132366	75692	132366	211786	121107	211786
G9-H2160	Outer port	85211	48726	85211	113614	64969	113614	142018	81211	142018	227229	129937	227229
G9-H2160	Innner port	85211	48726	85211	113614	64969	113614	142018	81211	142018	227229	129937	227229
G9-H2180	Outer port	113339	64811	113339	151118	86415	151118	188898	108018	188898	302236	172829	302236
G9-H2180	Innner port	113339	64811	113339	151118	86415	151118	188898	108018	188898	302236	172829	302236
G9-H2200	Outer port	144776	82788	144776	193034	110384	193034	241293	137979	241293			
G9-H2200	Innner port	144776	82788	144776	193034	110384	193034	241293	137979	241293			

Note:

1. The standard configuration is to rotate the piston counterclockwise when it is pressurized inside and clockwise when it is pressurized outside. For special requirements, contact Elite technical department.

2. 0° is BTO and ETC, 45° is RTO and RTC, and 90° is ETO and BTC

BTS-Gxx-H Range Hydraulic Acturators

Double-Acting Torque Output

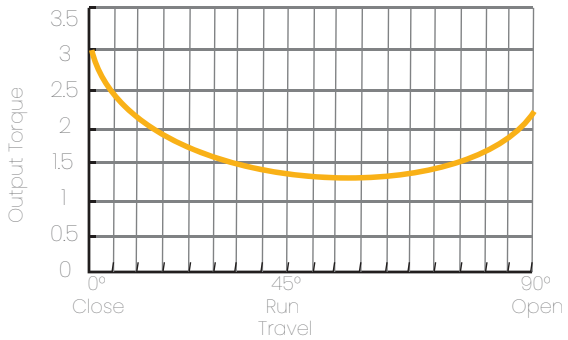

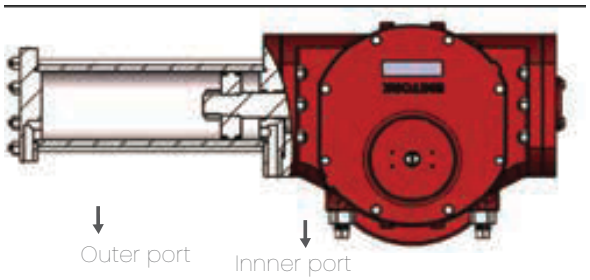

Canted Yoke Configuration

Actuator model	Oil inlet	Torque outputs at different oil supply pressure (Unit:Nm)											
		60 barG			80 barG			100 barG			160 barG		
		0°	45	90°	0°	45°	90°	0°	45°	90°	0°	45°	90°
GC0-H32	Outer port	437	204	307	582	272	409	728	340	511	1164	545	818
GC0-H32	Innner port	266	124	187	355	166	249	443	207	311	709	332	498
GC0-H40	Outer port	682	319	479	910	426	639	1137	532	799			
GC0-H40	Innner port	512	239	359	682	319	479	853	399	599			
GC0-H50	Outer port	1066	499	749	1421	665	998						
GC0-H50	Innner port	895	419	629	1194	559	839						
GC1-H40	Outer port	964	451	677	1285	601	903	1607	752	1129	2571	1203	1806
GC1-H40	Innner port	587	275	413	783	366	550	979	458	688	1566	733	1100
GC1-H50	Outer port	1506	705	1058	2008	940	1411	2510	1174	1763	4016	1879	2821
GC1-H50	Innner port	1130	529	794	1506	705	1058	1883	881	1323	3012	1409	2116
GC1-H63	Outer port	2391	1119	1680	3188	1492	2240	3985	1865	2800			
GC1-H63	Innner port	2015	943	1415	2686	1257	1887	3358	1571	2359			
GC2-H50	Outer port	1970	922	1384	2626	1229	1845	3283	1536	2306	5252	2457	3690
GC2-H50	Innner port	1477	691	1038	1970	922	1384	2462	1152	1730	3939	1843	2767
GC2-H63	Outer port	3127	1463	2197	4169	1951	2929	5212	2438	3661			
GC2-H63	Innner port	2635	1233	1851	3513	1643	2468	4391	2054	3085			
GC2-H80	Outer port	5042	2359	3542	6723	3145	4723						
GC2-H80	Innner port	4333	2027	3044	5777	2703	4059						
GC2-H100	Outer port	7878	3686	5534									
GC2-H100	Innner port	7169	3354	5036									
GC3-H2050	Outer port	3610	1689	2536	4814	2252	3381	6017	2815	4227	9627	4504	6763
GC3-H2050	Innner port	3610	1689	2536	4814	2252	3381	6017	2815	4227	9627	4504	6763

Actuator model	Oil inlet	Torque outputs at different oil supply pressure (Unit:Nm)											
		60 barG			80 barG			100 barG			160 barG		
		0°	45°	90°	0°	45°	90°	0°	45°	90°	0°	45°	90°
GC3-H63	Outer port	3495	1635	2455	4660	2180	3273	5825	2725	4092	9319	4360	6547
GC3-H63	Innner port	2702	1264	1898	3603	1686	2531	4504	2107	3164	7206	3372	5062
GC3-H80	Outer port	5635	2637	3959	7514	3515	5278	9392	4394	6598			
GC3-H80	Innner port	4843	2266	3402	6457	3021	4536	8071	3776	5670			
GC3-H100	Outer port	8805	4120	6186	11740	5493	8247						
GC3-H100	Innner port	7396	3461	5196	9862	4614	6928						
GC3-H125	Outer port	13758	6437	9665									
GC3-H125	Innner port	12349	5778	8675									
GC4-H2063	Outer port	6403	2996	4498	8538	3994	5997	10672	4993	7497	17075	7989	11995
GC4-H2063	Innner port	6403	2996	4498	8538	3994	5997	10672	4993	7497	17075	7989	11995
GC4-H100	Outer port	10103	4727	7097	13471	6302	9463	16838	7878	11828	26941	12605	18926
GC4-H100	Innner port	7577	3545	5323	10103	4727	7097	12629	5908	8871	20206	9454	14194
GC4-H2080	Outer port	11315	5294	7949	15087	7059	10598	18859	8823	13248			
GC4-H2080	Innner port	11315	5294	7949	15087	7059	10598	18859	8823	13248			
GC4-H125	Outer port	15786	7386	11089	21048	9847	14786	26310	12309	18482			
GC4-H125	Innner port	13260	6204	9315	17680	8272	12420	22100	10340	15525			
GC4-H140	Outer port	19802	9264	13910									
GC4-H140	Innner port	17276	8083	12136									
GC5-H100	Outer port	13440	6288	9441	17919	8384	12588	22399	10480	15735	35839	16768	25176
GC5-H100	Innner port	8601	4024	6042	11468	5366	8056	14336	6707	10070	22937	10731	16113
GC5-H2080	Outer port	12364	5785	8686	16486	7713	11581	20607	9641	14476	32972	15426	23162
GC5-H2080	Innner port	12364	5785	8686	16486	7713	11581	20607	9641	14476	32972	15426	23162
GC5-H120	Outer port	20999	9825	14752	27999	13100	19669	34999	16375	24586	55998	26200	39338
GC5-H120	Innner port	16161	7561	11353	21548	10082	15137	26935	12602	18921	43096	20163	30274
GC5-H140	Outer port	26342	12324	18504	35122	16432	24673	43903	20541	30841			
GC5-H140	Innner port	21503	10061	15106	28671	13414	20141	35839	16768	25176			
GC7-H140	Outer port	31792	14874	22333	42389	19832	29777	52986	24790	37222	84778	39664	59555
GC7-H140	Innner port	23844	11156	16750	31792	14874	22333	39740	18593	27916	63583	29748	44666
GC7-H2100	Outer port	26601	12446	18687	35468	16594	24916	44335	20743	31145	70936	33189	49831
GC7-H2100	Innner port	26601	12446	18687	35468	16594	24916	44335	20743	31145	70936	33189	49831
GC7-H2125	Outer port	42740	19997	30024	56987	26662	40032	71234	33328	50040			
GC7-H2125	Innner port	42740	19997	30024	56987	26662	40032	71234	33328	50040			

Actuator model	Oil inlet	Torque outputs at different oil supply pressure (Unit:Nm)											
		60 barG			80 barG			100 barG			160 barG		
		0°	45	90°	0°	45°	90°	0°	45°	90°	0°	45°	90°
GC7-H2140	Outer port	55635	26030	39083	74181	34706	52110	92726	43383	65138			
GC7-H2140	Innner port	55635	26030	39083	74181	34706	52110	92726	43383	65138			
GC7-H160	Outer port	41524	19428	29170	55365	25903	38893	69206	32379	48616			
GC7-H160	Innner port	33576	15709	23586	44768	20945	31448	55960	26182	39311			
GC7-H180	Outer port	52554	24588	36918	70071	32784	49224	87589	40980	61530			
GC7-H180	Innner port	44606	20869	31335	59474	27826	41779	74343	34782	52224			
GC8-H160	Outer port	49354	23091	34670	65805	30788	46227	82257	38485	57784	131611	61576	92454
GC8-H160	Innner port	37016	17318	26003	49354	23091	34670	61693	28864	43338	98708	46182	69340
GC8-H2125	Outer port	47908	22414	33654	63877	29886	44873	79847	37357	56091	127755	59772	89745
GC8-H2125	Innner port	47908	22414	33654	63877	29886	44873	79847	37357	56091	127755	59772	89745
GC8-H180	Outer port	62464	29225	43879	83285	38966	58506	104106	48708	73132	166570	77932	117012
GC8-H180	Innner port	50125	23452	35212	66834	31269	46949	83542	39086	58686	133667	62538	93898
GC8-H2140	Outer port	63235	29585	44421	84313	39447	59228	105391	49309	74035	168626	78894	118456
GC8-H2140	Innner port	63235	29585	44421	84313	39447	59228	105391	49309	74035	168626	78894	118456
GC8-H2160	Outer port	86370	40409	60673	115159	53879	80897	143949	67349	101121			
GC8-H2160	Innner port	86370	40409	60673	115159	53879	80897	143949	67349	101121			
GC8-H200	Outer port	77116	36080	54172	102821	48106	72230	128526	60133	90287			
GC8-H200	Innner port	64777	30307	45505	86370	40409	60673	107962	50512	75841			
GC9-H180	Outer port	81083	37936	56959	108110	50581	75945	135138	63226	94931	216220	101162	151890
GC9-H180	Innner port	56057	26227	39379	74743	34970	52505	93429	43712	65632	149486	69939	105011
GC9-H200	Outer port	100102	46834	70320	133469	62446	93759	166837	78057	117199	266939	124891	187519
GC9-H200	Innner port	75077	35126	52740	100102	46834	70320	125128	58543	87900	200204	93668	140639
GC9-H220	Outer port	121123	56669	85087	161498	75559	113449	201872	94449	141811	322996	151118	226898
GC9-H220	Innner port	96098	44961	67507	128131	59948	90009	160163	74935	112511	256261	119895	180018
GC9-H2160	Outer port	103105	48239	72429	137473	64319	96572	171842	80399	120715	274947	128638	193145
GC9-H2160	Innner port	103105	48239	72429	137473	64319	96572	171842	80399	120715	274947	128638	193145
GC9-H2180	Outer port	137140	64163	96338	182853	85550	128450	228566	106938	160563			
GC9-H2180	Innner port	137140	64163	96338	182853	85550	128450	228566	106938	160563			
GC9-H2200	Outer port	175179	81960	123059	233571	109280	164079	291964	136600	205099			
GC9-H2200	Innner port	175179	81960	123059	233571	109280	164079	291964	136600	205099			

Note:

1. The standard configuration is to rotate the piston counterclockwise when it is pressurized inside and clockwise when it is pressurized outside. For special requirements, contact Elite Technical department.

2. 0° is BTO and ETC, 45° is RTO and RTC, and 90° is ETO and BTC

BTS-Gxx-H Range Hydraulic Acturators

Single-Return Torque Output
Symmetric Yoke Configuration

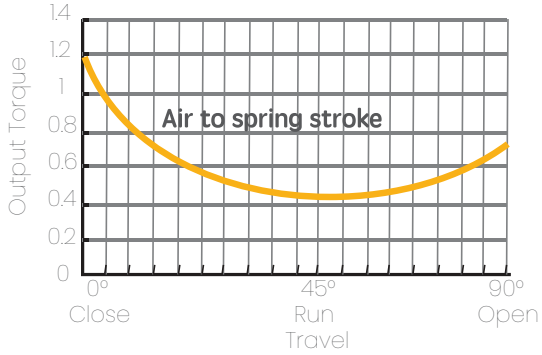

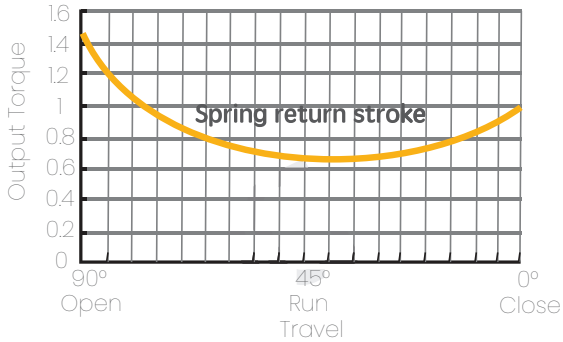

Air Open (FC)

Actuator model	Torque outputs at different oil supply pressure (Unit:Nm)														
	spring return torque			60 bar			80 bar			100 bar			160 bar		
	BTC(90°)	RTC(45°)	ETC(0°)	BTO(0°)	RTO(45°)	ETO(90°)	BTO(0°)	RTO(45°)	ETO(90°)	BTO(0°)	RTO(45°)	ETO(90°)	BTO(0°)	RTO(45°)	ETO(90°)
G0-H40 SR4	461	218	301				262	104	103	403	185	244	826	427	667
G0-H40 SR5	571	272	381							324	131	134	747	373	557
G0-H40 SR6	705	336	470										658	309	423
G0-H50 SR4	461	218	301	439	205	279	685	346	526	932	487	772			
G0-H50 SR5	571	272	381	359	151	169	606	292	416	853	433	662	1593	856	1402
G0-H50 SR6	705	336	470				517	228	282	763	369	529	1503	793	1269
G1-H40 SR4	797	380	531										763	361	498
G1-H50 SR4	797	380	531				714	332	448	1025	510	759	1958	1044	1693
G1-H50 SR5	996	475	664				581	237	249	892	415	560	1826	949	1494
G1-H50 SR6	1190	578	830							726	312	366	1660	846	1299
G1-H50 SR7	1603	786	1146										1343	637	886
G1-H63 SR4	797	380	531	1134	572	868	1689	890	1423	2244	1207	1978	3909	2159	3643
G1-H63 SR5	996	475	664	1001	478	669	1556	795	1224	2111	1112	1779	3776	2064	3444
G1-H63 SR6	1190	578	830	835	375	475	1390	692	1030	1945	1009	1585	3610	1961	3250
G1-H63 SR7	1603	786	1146				1074	483	617	1629	801	1172	3293	1753	2837
G1-H63 SR8	2308	1083	1480										2960	1456	2132
G2-H50 SR4	1603	769	1085										2170	1093	1652
G2-H50 SR5	2035	1019	1530										1726	842	1220
G2-H63 SR4	1603	769	1085	1092	476	574	1818	891	1300	2544	1306	2026	4721	2552	4203
G2-H63 SR5	2374	1164	1696							1933	912	1255	4111	2157	3432
G2-H63 SR6	2035	1019	1530				1373	641	868	2099	1056	1594	4276	2301	3771
G2-H63 SR7	2848	1414	2096										3710	1907	2958
G2-H80 SR4	1603	769	1085	2496	1279	1978	3690	1962	3172	4883	2644	4365			
G2-H80 SR5	2374	1164	1696	1885	884	1207	3079	1567	2401	4273	2249	3595			
G2-H80 SR6	2035	1019	1530	2051	1028	1546	3245	1711	2739	4439	2394	3933			
G2-H80 SR7	2848	1414	2096				2679	1317	1927	3872	1999	3121	7454	4047	6702
G2-H100 SR4	1603	769	1085	4840	2620	4322	6815	3749	6297	8790	4878	8272			

Actuator model	Torque outputs at different oil supply pressure (Unit:Nm)														
	spring return torque			60 bar			80 bar			100 bar			160 bar		
	BTC(90°)	RTC(45°)	ETC(0°)	BTO(0°)	RTO(45°)	ETO(90°)	BTO(0°)	RTO(45°)	ETO(90°)	BTO(0°)	RTO(45°)	ETO(90°)	BTO(0°)	RTO(45°)	ETO(90°)
G2-H100 SR5	2374	1164	1696	4229	2225	3551	6205	3354	5526	4483	7501	6619			
G2-H100 SR6	2035	1019	1530	4395	2369	3890	6370	3498	5865	4628	7840	6917			
G2-H100 SR7	2848	1414	2096	3829	1975	3077	5804	3104	5052	4233	7027	6200			
G3-H2050 SR4	3336	1634	2377							1210	1637	1533	5579	2916	4620
G3-H2050 SR5	4547	2192	3120										4836	2358	3409
G3-H2050 SR6	5805	2783	3930										4027	1766	2151
G3-H63 SR4	3336	1634	2377										3578	1772	2619
G3-H63 SR5	4547	2192	3120										2836	1214	1409
G3-H80 SR4	3336	1634	2377				2959	1418	2000	2181	3335	3124	8296	4470	7337
G3-H80 SR5	4547	2192	3120				2216	860	790	1622	2124	1990	7553	3911	6126
G3-H80 SR6	5805	2783	3930										6743	3320	4868
G3-H80 SR7	6921	3253	4455										6219	2851	3752
G3-H100 SR4	3336	1634	2377	3736	1862	2777	5773	3027	4814	4192	6852	6419			
G3-H100 SR5	4547	2192	3120	2993	1303	1566	5030	2469	3604	3634	5641	5285			
G3-H100 SR6	5805	2783	3930				4221	1877	2345	3042	4383	4106	12371	6538	10496
G3-H100 SR7	6921	3253	4455							2573	3266	3060	11846	6069	9379
G3-H100 SR8	9096	4335	6064										10236	4987	7204
G3-H125 SR4	3336	1634	2377	7829	4203	6870	11231	6148	10272						
G3-H125 SR5	4547	2192	3120	7086	3644	5659	10488	5590	9061						
G3-H125 SR6	5805	2783	3930	6276	3053	4401	9679	4998	7803						
G3-H125 SR7	6921	3253	4455	5752	2584	3285	9154	4529	6687	6474	10089	9452			
G3-H125 SR8	9096	4335	6064	4142	1502	1110	7544	3447	4512	5392	7914	7414			
G4-H2063 SR4	5109	2479	3562							2564	3710	3710	10549	5590	9002
G4-H2063 SR5	6661	3194	4509							1850	2159	2159	9603	4876	7451
G4-H2063 SR6	8217	3976	5690										8422	4093	5895
G4-H2063 SR7	9426	4548	6480										7631	3522	4686
G4-H100 SR4	5109	2479	3562	2700	1101	1153	4787	2295	3240	3489	5327	5327	13137	7070	11590
G4-H100 SR5	6661	3194	4509				3841	1581	1689	2775	3776	3776	12190	6356	10038
G4-H100 SR6	8217	3976	5690										11009	5573	8482
G4-H100 SR7	9426	4548	6480										10219	5001	7273
G4-H2080 SR4	5109	2479	3562	5789	2868	4242	8906	4651	7359	6433	10476	10476	21375	11780	19828
G4-H2080 SR5	6661	3194	4509	4843	2154	2691	7960	3936	5808	5719	8925	8925	20428	11066	18277
G4-H2080 SR6	8217	3976	5690				6778	3154	4252	4936	7369	7369	19247	10284	16720
G4-H2080 SR7	9426	4548	6480				5988	2582	3043	4365	6160	6160	18457	9712	15511
G4-H120 SR4	5109	2479	3562	6373	3202	4826	9685	5096	8138	6990	11450	11450	22933	12672	21386
G4-H120 SR5	6661	3194	4509	5427	2488	3275	8739	4382	6587	6276	9899	9899	21987	11958	19835
G4-H120 SR6	8217	3976	5690				7558	3599	5031	5493	8343	8343	20806	11175	18279
G4-H120 SR7	9426	4548	6480				6767	3028	3822	4922	7134	7134	20015	10603	17070
G4-H140 SR4	5109	2479	3562	10715	5685	9168	15474	8406	13927	11128	18687	18687			

Actuator model	Torque outputs at different oil supply pressure (Unit:Nm)														
	spring return torque			60 bar			80 bar			100 bar			160 bar		
	BTC(90°)	RTC(45°)	ETC(0°)	BTO(0°)	RTO(45°)	ETO(90°)	BTO(0°)	RTO(45°)	ETO(90°)	BTO(0°)	RTO(45°)	ETO(90°)	BTO(0°)	RTO(45°)	ETO(90°)
G4-H140 SR5	6661	3194	4509	9769	4971	7617	14528	7692	12376	19287	10414	17135			
G4-H140 SR6	8217	3976	5690	8588	4188	6061	13347	6910	10820	18106	9631	15579			
G4-H140 SR7	9426	4548	6480	7797	3617	4852	12556	6338	9611	17316	9059	14370			
G5-H100 SR4	10939	5202	7257										11700	5637	8017
G5-H100 SR5	13738	6417	8706										10250	4423	5218
G5-H2080 SR4	10939	5202	7257							9774	4536	6092	19993	10380	16311
G5-H2080 SR5	13738	6417	8706							8325	3322	3293	18543	9165	13512
G5-H2080 SR6	16408	7514	9873										17376	8068	10841
G5-H120 SR4	10939	5202	7257				10552	4981	6870	15004	7527	11322	28360	15165	24678
G5-H120 SR5	13738	6417	8706				9102	3766	4070	13554	6312	8523	26911	13950	21879
G5-H120 SR6	16408	7514	9873							12388	5215	5852	25744	12853	19209
G5-H120 SR7	20998	10153	14513										21104	10214	14619
G5-H140 SR4	10939	5202	7257	10515	4960	6833	16439	8347	12756	22362	11735	18680	40134	21897	36452
G5-H140 SR5	13738	6417	8706	9065	3745	4033	14989	7133	9957	20913	10520	15881	38684	20682	33652
G5-H140 SR6	16408	7514	9873				13822	6035	7287	19746	9423	13211	37517	19585	30982
G5-H140 SR7	20998	10153	14513							15106	6784	8621	32877	16946	26392
G7-H140 SR4	19011	9115	12869				13405	5909	7263	19974	9666	13832	39679	20934	33537
G7-H140 SR5	24122	11358	15604							17239	7422	8721	36945	18691	28426
G7-H140 SR6	25876	12156	16640							16202	6624	6967	35908	17893	26672
G7-H140 SR7	31847	15366	21895										30653	14683	20701
G7-H2100 SR4	19011	9115	12869				16444	7647	10302	23772	11837	17630	45756	24409	39614
G7-H2100 SR5	24122	11358	15604				13709	5404	5191	21037	9594	12519	43022	22166	34503
G7-H2100 SR6	25876	12156	16640							20000	8796	10765	41985	21368	32749
G7-H2100 SR7	31847	15366	21895										36730	18158	26778
G7-H2125 SR4	19011	9115	12869	22454	11084	16312	34228	17817	28086	46002	24549	39860	81325	44748	75183
G7-H2125 SR5	24122	11358	15604	19719	8841	11201	31493	15573	22975	43267	22306	34749	78590	42505	70072
G7-H2125 SR6	25876	12156	16640	18682	8043	9447	30457	14775	21221	42231	21508	32995	77553	41707	68318
G7-H2125 SR7	31847	15366	21895				25202	11566	15249	36976	18299	27024	72298	38497	62346
G7-H2140 SR4	19011	9115	12869	33111	17178	26969	48437	25942	42295	63764	34706	57622	109744	60999	103602
G7-H2140 SR5	24122	11358	15604	30376	14935	21858	45703	23699	37184	61029	32463	52511	107009	58756	98491
G7-H2140 SR6	25876	12156	16640	29339	14137	20104	44666	22901	35430	59993	31665	50757	105972	57958	96736
G7-H2140 SR7	31847	15366	21895	24085	10927	14132	39411	19691	29459	54738	28455	44785	100717	54748	90765
G7-H160 SR4	19011	9115	12869	14880	6753	8738	24129	12042	17987	33379	17331	27237	61128	33199	54986
G7-H160 SR5	24122	11358	15604				21395	9799	12876	30644	15088	22126	58393	30956	49875
G7-H160 SR6	25876	12156	16640				20358	9001	11122	29608	14290	20372	57356	30158	48120
G7-H160 SR7	31847	15366	21895							24353	11080	14400	52101	26948	42149
G7-H180 SR4	19011	9115	12869	23995	11965	17853	36283	18992	30141	48571	26019	42429	85436	47099	79294
G7-H180 SR5	24122	11358	15604	21261	9722	12742	33549	16749	25030	45837	23776	37319	82701	44856	74183
G7-H180 SR6	25876	12156	16640	20224	8924	10988	32512	15951	23276	44800	22978	35564	81664	44058	72428
G7-H180 SR7	31847	15366	21895				27257	12741	17305	39545	19768	29593	76409	40848	66457
G8-H160 SR4	37853	18263	26024							24962	10892	13133	55553	28385	43724
G8-H160 SR5	50429	23254	30900										50677	23395	31148
G8-H160 SR6	59453	28025	38564										43013	18624	22124

Actuator model	Torque outputs at different oil supply pressure (Unit:Nm)														
	spring return torque			60 bar			80 bar			100 bar			160 bar		
	BTC(90°)	RTC(45°)	ETC(0°)	BTO(0°)	RTO(45°)	ETO(90°)	BTO(0°)	RTO(45°)	ETO(90°)	BTO(0°)	RTO(45°)	ETO(90°)	BTO(0°)	RTO(45°)	ETO(90°)
G8-H2125 SR4	37853	18263	26024				26767	11924	14938	39965	19471	28136	79559	42112	67730
G8-H2125 SR5	50429	23254	30900							35089	14481	15560	74682	37122	55153
G8-H2125 SR6	59453	28025	38564										67019	32351	46130
G8-H2125 SR7	79665	36444	47799										57784	23932	25918
G8-H180 SR4	37853	18263	26024				29210	13321	17381	43019	21218	31190	84445	44906	72616
G8-H180 SR5	50429	23254	30900							38143	16228	18614	79568	39916	60039
G8-H180 SR6	59453	28025	38564										71905	35145	51016
G8-H180 SR7	79665	36444	47799										62670	26726	30804
G8-H2140 SR4	37853	18263	26024	26236	11621	14407	43656	21582	31827	61076	31543	49247	113337	61428	101508
G8-H2140 SR5	50429	23254	30900				38780	16592	19251	56200	26553	36671	108460	56438	88931
G8-H2140 SR6	59453	28025	38564							48536	21782	27648	100797	51666	79908
G8-H2140 SR7	79665	36444	47799										91562	43247	59696
G8-H2160 SR4	37853	18263	26024	45356	22554	33527	69149	36160	57320	92942	49766	81113	164322	90583	152493
G8-H2160 SR5	50429	23254	30900	40479	17564	20950	64273	31170	44744	88066	44775	68537	159446	85593	139917
G8-H2160 SR6	59453	28025	38564	32816	12793	11927	56609	26399	35720	80402	40004	59514	151782	80822	130893
G8-H2160 SR7	79665	36444	47799				47374	17979	15508	71167	31585	39301	142547	72402	110681
G8-H200 SR4	37853	18263	26024	27511	12350	15682	45356	22554	33527	63201	32758	51372	116736	63371	104907
G8-H200 SR5	50429	23254	30900				40479	17564	20950	58324	27768	38795	111859	58381	92330
G8-H200 SR6	59453	28025	38564				32816	12793	11927	50661	22997	29772	104196	53610	83307
G8-H200 SR7	79665	36444	47799										94961	45191	63095
G9-H180 SR4	65894	30416	40485							36728	13738	11320	83056	40230	57648
G9-H180 SR5	81236	37539	50059										73483	33106	42306
G9-H200 SR4	65894	30416	40485							62926	28718	37518	124972	64199	99564
G9-H200 SR5	81236	37539	50059							53352	21595	22175	115399	57075	84222
G9-H200 SR6	100102	46509	62564										102894	48106	65356
G9-H200 SR7	125128	57242	75077										90381	37373	40330
G9-H220 SR4	65894	30416	40485	38934	14999	13526	65408	30138	39999	91881	45276	66473	171301	90691	145892
G9-H220 SR5	81236	37539	50059				55834	23014	24657	82307	38152	51130	161727	83567	130550
G9-H220 SR6	100102	46509	62564							69803	29183	32264	149222	74598	111684
G9-H220 SR7	125128	57242	75077										136710	63865	86659
G9-H2160 SR4	65894	30416	40485	44725	18311	19317	73129	34553	47721	101533	50795	76124	186743	99522	161335
G9-H2160 SR5	81236	37539	50059				63556	27429	32378	91959	43671	60782	177170	92398	145993
G9-H2160 SR6	100102	46509	62564							79454	34702	41916	164665	83428	127127
G9-H2160 SR7	125128	57242	75077							66942	23969	16890	152152	72695	102101
G9-H2180 SR4	65894	30416	40485	72853	34395	47445	110633	55999	85225	148412	77603	123004	261751	142414	236343
G9-H2180 SR5	81236	37539	50059	63280	27271	32103	101059	48875	69882	138839	70479	107662	252178	135290	221000
G9-H2180 SR6	100102	46509	62564				88554	39906	51016	126334	61509	88796	239673	126320	202134
G9-H2180 SR7	125128	57242	75077				76042	29173	25991	113821	50776	63770	227160	115587	177109
G9-H2200 SR4	65894	30416	40485	104290	52372	78882	152549	79968	127141	200807	107564	175399	345583	190352	320175
G9-H2200 SR5	81236	37539	50059	94717	45248	63540	142975	72844	111798	191234	100440	160057	336010	183228	304832
G9-H2200 SR6	100102	46509	62564	82212	36279	44674	130470	63875	92932	178729	91471	141191	323505	174258	285966
G9-H2200 SR7	125128	57242	75077				117958	53142	67907	166216	80738	116165	310992	163525	260941

BTS-Gxx-H Range Hydraulic Acturators

Single-Return Torque Output
Symmetric Yoke Configuration

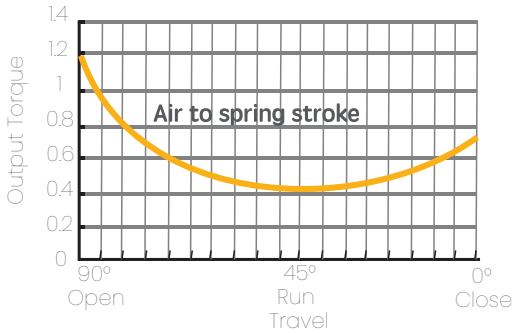

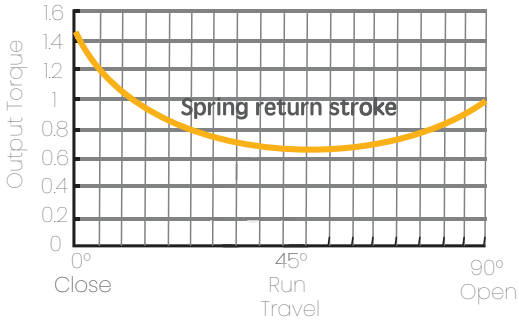

Air Shut (FO)

Actuator model	Torque outputs at different oil supply pressure (Unit:Nm)														
	spring return torque			60 bar			80 bar			100 bar			160 bar		
	BTO(0°)	RTO(45°)	ETO(90°)	BTC(90°)	RTC(45°)	ETC(0°)	BTC(90°)	RTC(45°)	ETC(0°)	BTC(90°)	RTC(45°)	ETC(0°)	BTC(90°)	RTC(45°)	ETC(0°)
G0-H40 SR4	461	218	301				262	104	103	403	185	244	826	427	667
G0-H40 SR5	571	272	381							324	131	134	747	373	557
G0-H40 SR6	705	336	470										658	309	423
G0-H50 SR4	461	218	301	439	205	279	685	346	526	932	487	772			
G0-H50 SR5	571	272	381	359	151	169	606	292	416	853	433	662	1593	856	1402
G0-H50 SR6	705	336	470				517	228	282	763	369	529	1503	793	1269
G1-H40 SR4	797	380	531										763	361	498
G1-H50 SR4	797	380	531				714	332	448	1025	510	759	1958	1044	1693
G1-H50 SR5	996	475	664				581	237	249	892	415	560	1826	949	1494
G1-H50 SR6	1190	578	830							726	312	366	1660	846	1299
G1-H50 SR7	1603	786	1146										1343	637	886
G1-H63 SR4	797	380	531	1134	572	868	1689		1423	2244	1207	1978	3909	2159	3643
G1-H63 SR5	996	475	664	1001	478	669	1556	795	1224	2111	1112	1779	3776	2064	3444
G1-H63 SR6	1190	578	830	835	375	475	1390	692	1030	1945	1009	1585	3610	1961	3250
G1-H63 SR7	1603	786	1146				1074	483	617	1629	801	1172	3293	1753	2837
G1-H63 SR8	2308	1083	1480										2960	1456	2132
G2-H50 SR4	1603	769	1085										2170	1093	1652
G2-H50 SR5	2035	1019	1530										1726	842	1220
G2-H63 SR4	1603	769	1085	1092	476	574	1818	891	1300	2544	1306	2026	4721	2552	4203
G2-H63 SR5	2374	1164	1696							1933	912	1255	4111	2157	3432
G2-H63 SR6	2035	1019	1530				1373	641	868	2099	1056	1594	4276	2301	3771
G2-H63 SR7	2848	1414	2096										3710	1907	2958
G2-H80 SR4	1603	769	1085	2496	1279	1978	3690	1962	3172	4883	2644	4365			
G2-H80 SR5	2374	1164	1696	1885	884	1207	3079	1567	2401	4273	2249	3595			
G2-H80 SR6	2035	1019	1530	2051	1028	1546	3245	1711	2739	4439	2394	3933			
G2-H80 SR7	2848	1414	2096				2679	1317	1927	3872	1999	3121	7454	4047	6702
G2-H100 SR4	1603	769	1085	4840	2620	4322	6815	3749	6297	8790	4878	8272			

Actuator model	Torque outputs at different oil supply pressure (Unit:Nm)														
	spring return torque			60 bar			80 bar			100 bar			160 bar		
	BTO(0°)	RTO(45°)	ETO(90°)	BTC(90°)	RTC(45°)	ETC(0°)	BTC(90°)	RTC(45°)	ETC(0°)	BTC(90°)	RTC(45°)	ETC(0°)	BTC(90°)	RTC(45°)	ETC(0°)
G2-H100 SR5	2374	1164	1696	4229	2225	3551	6205	3354	5526	8180	4483	7501			
G2-H100 SR6	2035	1019	1530	4395	2369	3890	6370	3498	5865	8345	4628	7840			
G2-H100 SR7	2848	1414	2096	3829	1975	3077	5804	3104	5052	7779	4233	7027			
G3-H2050 SR4	3336	1634	2377							2595	1210	1637	5579	2916	4620
G3-H2050 SR5	4547	2192	3120										4836	2358	3409
G3-H2050 SR6	5805	2783	3930										4027	1766	2151
G3-H63 SR4	3336	1634	2377										3578	1772	2619
G3-H63 SR5	4547	2192	3120										2836	1214	1409
G3-H80 SR4	3336	1634	2377				2959	1418	2000	4293	2181	3335	8296	4470	7337
G3-H80 SR5	4547	2192	3120				2216	860	790	3551	1622	2124	7553	3911	6126
G3-H80 SR6	5805	2783	3930										6743	3320	4868
G3-H80 SR7	6921	3253	4455										6219	2851	3752
G3-H100 SR4	3336	1634	2377	3736	1862	2777	5773	3027	4814	7811	4192	6852			
G3-H100 SR5	4547	2192	3120	2993	1303	1566	5030	2469	3604	7068	3634	5641			
G3-H100 SR6	5805	2783	3930				4221	1877	2345	6258	3042	4383	12371	6538	10496
G3-H100 SR7	6921	3253	4455							5733	2573	3266	11846	6069	9379
G3-H100 SR8	9096	4335	6064										10236	4987	7204
G3-H125 SR4	3336	1634	2377	7829	4203	6870	11231	6148	10272						
G3-H125 SR5	4547	2192	3120	7086	3644	5659	10488	5590	9061						
G3-H125 SR6	5805	2783	3930	6276	3053	4401	9679	4998	7803						
G3-H125 SR7	6921	3253	4455	5752	2584	3285	9154	4529	6687	12556	6474	10089			
G3-H125 SR8	9096	4335	6064	4142	1502	1110	7544	3447	4512	10946	5392	7914			
G4-H2063 SR4	5109	2479	3562							5257	2564	3710	10549	5590	9002
G4-H2063 SR5	6661	3194	4509							4311	1850	2159	9603	4876	7451
G4-H2063 SR6	8217	3976	5690										8422	4093	5895
G4-H2063 SR7	9426	4548	6480										7631	3522	4686
G4-H100 SR4	5109	2479	3562	2700	1101	1153	4787	2295	3240	6874	3489	5327	13137	7070	11590
G4-H100 SR5	6661	3194	4509				3841	1581	1689	5928	2775	3776	12190	6356	10038
G4-H100 SR6	8217	3976	5690										11009	5573	8482
G4-H100 SR7	9426	4548	6480										10219	5001	7273
G4-H2080 SR4	5109	2479	3562	5789	2868	4242	8906	4651	7359	12023	6433	10476	21375	11780	19828
G4-H2080 SR5	6661	3194	4509	4843	2154	2691	7960	3936	5808	11077	5719	8925	20428	11066	18277
G4-H2080 SR6	8217	3976	5690				6778	3154	4252	9896	4936	7369	19247	10284	16720
G4-H2080 SR7	9426	4548	6480				5988	2582	3043	9105	4365	6160	18457	9712	15511
G4-H120 SR4	5109	2479	3562	6373	3202	4826	9685	5096	8138	12997	6990	11450	22933	12672	21386
G4-H120 SR5	6661	3194	4509	5427	2488	3275	8739	4382	6587	12051	6276	9899	21987	11958	19835
G4-H120 SR6	8217	3976	5690				7558	3599	5031	10870	5493	8343	20806	11175	18279
G4-H120 SR7	9426	4548	6480				6767	3028	3822	10079	4922	7134	20015	10603	17070
G4-H140 SR4	5109	2479	3562	10715	5685	9168	15474	8406	13927	20234	11128	18687			

Actuator model	Torque outputs at different oil supply pressure (Unit:Nm)														
	spring return torque			60 bar			80 bar			100 bar			160 bar		
	BTO(0°)	RTO(45°)	ETO(90°)	BTC(90°)	RTC(45°)	ETC(0°)	BTC(90°)	RTC(45°)	ETC(0°)	BTC(90°)	RTC(45°)	ETC(0°)	BTC(90°)	RTC(45°)	ETC(0°)
G4-H140 SR5	6661	3194	4509	9769	4971	7617	14528	7692	12376	19287	10414	17135			
G4-H140 SR6	8217	3976	5690	8588	4188	6061	13347	6910	10820	18106	9631	15579			
G4-H140 SR7	9426	4548	6480	7797	3617	4852	12556	6338	9611	17316	9059	14370			
G5-H100 SR4	10939	5202	7257										11700	5637	8017
G5-H100 SR5	13738	6417	8706										10250	4423	5218
G5-H2080 SR4	10939	5202	7257							9774	4536	6092	19993	10380	16311
G5-H2080 SR5	13738	6417	8706							8325	3322	3293	18543	9165	13512
G5-H2080 SR6	16408	7514	9873										17376	8068	10841
G5-H120 SR4	10939	5202	7257				10552	4981	6870	15004	7527	11322	28360	15165	24678
G5-H120 SR5	13738	6417	8706				9102	3766	4070	13554	6312	8523	26911	13950	21879
G5-H120 SR6	16408	7514	9873							12388	5215	5852	25744	12853	19209
G5-H120 SR7	20998	10153	14513										21104	10214	14619
G5-H140 SR4	10939	5202	7257	10515	4960	6833	16439	8347	12756	22362	11735	18680	40134	21897	36452
G5-H140 SR5	13738	6417	8706	9065	3745	4033	14989	7133	9957	20913	10520	15881	38684	20682	33652
G5-H140 SR6	16408	7514	9873				13822	6035	7287	19746	9423	13211	37517	19585	30982
G5-H140 SR7	20998	10153	14513							15106	6784	8621	32877	16946	26392
G7-H140 SR4	19011	9115	12869				13405	5909	7263	19974	9666	13832	39679	20934	33537
G7-H140 SR5	24122	11358	15604							17239	7422	8721	36945	18691	28426
G7-H140 SR6	25876	12156	16640							16202	6624	6967	35908	17893	26672
G7-H140 SR7	31847	15366	21895										30653	14683	20701
G7-H2100 SR4	19011	9115	12869				16444	7647	10302	23772	11837	17630	45756	24409	39614
G7-H2100 SR5	24122	11358	15604				13709	5404	5191	21037	9594	12519	43022	22166	34503
G7-H2100 SR6	25876	12156	16640							20000	8796	10765	41985	21368	32749
G7-H2100 SR7	31847	15366	21895										36730	18158	26778
G7-H2125 SR4	19011	9115	12869	22454	11084	16312	34228	17817	28086	46002	24549	39860	81325	44748	75183
G7-H2125 SR5	24122	11358	15604	19719	8841	11201	31493	15573	22975	43267	22306	34749	78590	42505	70072
G7-H2125 SR6	25876	12156	16640	18682	8043	9447	30457	14775	21221	42231	21508	32995	77553	41707	68318
G7-H2125 SR7	31847	15366	21895				25202	11566	15249	36976	18299	27024	72298	38497	62346
G7-H2140 SR4	19011	9115	12869	33111	17178	26969	48437	25942	42295	63764	34706	57622	109744	60999	103602
G7-H2140 SR5	24122	11358	15604	30376	14935	21858	45703	23699	37184	61029	32463	52511	107009	58756	98491
G7-H2140 SR6	25876	12156	16640	29339	14137	20104	44666	22901	35430	59993	31665	50757	105972	57958	96736
G7-H2140 SR7	31847	15366	21895	24085	10927	14132	39411	19691	29459	54738	28455	44785	100717	54748	90765
G7-H160 SR4	19011	9115	12869	14880	6753	8738	24129	12042	17987	33379	17331	27237	61128	33199	54986
G7-H160 SR5	24122	11358	15604				21395	9799	12876	30644	15088	22126	58393	30956	49875
G7-H160 SR6	25876	12156	16640				20358	9001	11122	29608	14290	20372	57356	30158	48120
G7-H160 SR7	31847	15366	21895							24353	11080	14400	52101	26948	42149
G7-H180 SR4	19011	9115	12869	23995	11965	17853	36283	18992	30141	48571	26019	42429	85436	47099	79294
G7-H180 SR5	24122	11358	15604	21261	9722	12742	33549	16749	25030	45837	23776	37319	82701	44856	74183
G7-H180 SR6	25876	12156	16640	20224	8924	10988	32512	15951	23276	44800	22978	35564	81664	44058	72428
G7-H180 SR7	31847	15366	21895				27257	12741	17305	39545	19768	29593	76409	40848	66457
G8-H160 SR4	37853	18263	26024							24962	10892	13133	55553	28385	43724
G8-H160 SR5	50429	23254	30900										50677	23395	31148
G8-H160 SR6	59453	28025	38564										43013	18624	22124

Actuator model	Torque outputs at different oil supply pressure (Unit:Nm)														
	spring return torque			60 bar			80 bar			100 bar			160 bar		
	BTO(0°)	RTO(45°)	ETO(90°)	BTC(90°)	RTC(45°)	ETC(0°)	BTC(90°)	RTC(45°)	ETC(0°)	BTC(90°)	RTC(45°)	ETC(0°)	BTC(90°)	RTC(45°)	ETC(0°)
G8-H2125 SR4	37853	18263	26024				26767	11924	14938	39965	19471	28136	79559	42112	67730
G8-H2125 SR5	50429	23254	30900							35089	14481	15560	74682	37122	55153
G8-H2125 SR6	59453	28025	38564										67019	32351	46130
G8-H2125 SR7	79665	36444	47799										57784	23932	25918
G8-H180 SR4	37853	18263	26024				29210	13321	17381	43019	21218	31190	84445	44906	72616
G8-H180 SR5	50429	23254	30900							38143	16228	18614	79568	39916	60039
G8-H180 SR6	59453	28025	38564										71905	35145	51016
G8-H180 SR7	79665	36444	47799										62670	26726	30804
G8-H2140 SR4	37853	18263	26024	26236	11621	14407	43656	21582	31827	61076	31543	49247	113337	61428	101508
G8-H2140 SR5	50429	23254	30900				38780	16592	19251	56200	26553	36671	108460	56438	88931
G8-H2140 SR6	59453	28025	38564							48536	21782	27648	100797	51666	79908
G8-H2140 SR7	79665	36444	47799										91562	43247	59696
G8-H2160 SR4	37853	18263	26024	45356	22554	33527	69149	36160	57320	92942	49766	81113	164322	90583	152493
G8-H2160 SR5	50429	23254	30900	40479	17564	20950	64273	31170	44744	88066	44775	68537	159446	85593	139917
G8-H2160 SR6	59453	28025	38564	32816	12793	11927	56609	26399	35720	80402	40004	59514	151782	80822	130893
G8-H2160 SR7	79665	36444	47799				47374	17979	15508	71167	31585	39301	142547	72402	110681
G8-H200 SR4	37853	18263	26024	27511	12350	15682	45356	22554	33527	63201	32758	51372	116736	63371	104907
G8-H200 SR5	50429	23254	30900				40479	17564	20950	58324	27768	38795	111859	58381	92330
G8-H200 SR6	59453	28025	38564				32816	12793	11927	50661	22997	29772	104196	53610	83307
G8-H200 SR7	79665	36444	47799										94961	45191	63095
G9-H180 SR4	65894	30416	40485							36728	13738	11320	83056	40230	57648
G9-H180 SR5	81236	37539	50059										73483	33106	42306
G9-H200 SR4	65894	30416	40485							62926	28718	37518	124972	64199	99564
G9-H200 SR5	81236	37539	50059							53352	21595	22175	115399	57075	84222
G9-H200 SR6	100102	46509	62564										102894	48106	65356
G9-H200 SR7	125128	57242	75077										90381	37373	40330
G9-H220 SR4	65894	30416	40485	38934	14999	13526	65408	30138	39999	91881	45276	66473	171301	90691	145892
G9-H220 SR5	81236	37539	50059				55834	23014	24657	82307	38152	51130	161727	83567	130550
G9-H220 SR6	100102	46509	62564							69803	29183	32264	149222	74598	111684
G9-H220 SR7	125128	57242	75077										136710	63865	86659
G9-H2160 SR4	65894	30416	40485	44725	18311	19317	73129	34553	47721	101533	50795	76124	186743	99522	161335
G9-H2160 SR5	81236	37539	50059				63556	27429	32378	91959	43671	60782	177170	92398	145993
G9-H2160 SR6	100102	46509	62564							79454	34702	41916	164665	83428	127127
G9-H2160 SR7	125128	57242	75077							66942	23969	16890	152152	72695	102101
G9-H2180 SR4	65894	30416	40485	72853	34395	47445	110633	55999	85225	148412	77603	123004	261751	142414	236343
G9-H2180 SR5	81236	37539	50059	63280	27271	32103	101059	48875	69882	138839	70479	107662	252178	135290	221000
G9-H2180 SR6	100102	46509	62564				88554	39906	51016	126334	61509	88796	239673	126320	202134
G9-H2180 SR7	125128	57242	75077				76042	29173	25991	113821	50776	63770	227160	115587	177109
G9-H2200 SR4	65894	30416	40485	104290	52372	78882	152549	79968	127141	200807	107564	175399	345583	190352	320175
G9-H2200 SR5	81236	37539	50059	94717	45248	63540	142975	72844	111798	191234	100440	160057	336010	183228	304832
G9-H2200 SR6	100102	46509	62564	82212	36279	44674	130470	63875	92932	178729	91471	141191	323505	174258	285966
G9-H2200 SR7	125128	57242	75077				117958	53142	67907	166216	80738	116165	310992	163525	260941

BTS-Gxx-H Range Hydraulic Acturators

Single-Return Torque Output
Canted Yoke Configuration

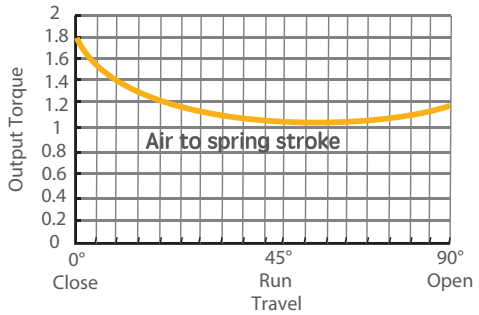

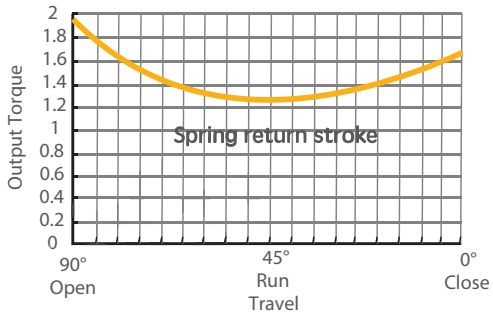

Air Open (FC)

Actuator model	Torque outputs at different oil supply pressure (Unit:Nm)														
	spring return torque			60 bar			80 bar			100 bar			160 bar		
	BTC(90°)	RTC(45°)	ETC(0°)	BTO(0°)	RTO(45°)	ETO(90°)	BTO(0°)	RTO(45°)	ETO(90°)	BTO(0°)	RTO(45°)	ETO(90°)	BTO(0°)	RTO(45°)	ETO(90°)
GC0-H40 SR4	394	218	367							491	185	209	1006	427	571
GC0-H40 SR5	489	272	463										910	373	477
GC0-H40 SR6	603	336	572										801	309	362
GC0-H50 SR4	394	218	367	534	205	239	834	346	450	1135	487	661			
GC0-H50 SR5	489	272	463				738	292	356	1038	433	567			
GC0-H50 SR6	603	336	572							930	369	452			
GC1-H40 SR4	682	380	647										930	361	426
GC1-H50 SR4	682	380	647							1248	510	650	2385	1044	1449
GC1-H50 SR5	852	475	808							1086	415	480	2223	949	1279
GC1-H50 SR6	1019	578	1010										2021	846	1112
GC1-H50 SR7	1372	786	1396										1635	637	759
GC1-H63 SR4	682	380	647	1381	572	743	2056	890	1218	2732	1207	1694			
GC1-H63 SR5	852	475	808	1219	478	573	1895	795	1048	2571	1112	1523			
GC1-H63 SR6	1019	578	1010	1017	375	406	1693	692	882	2368	1009	1357			
GC1-H63 SR7	1372	786	1396							1983	801	1003	4010	1753	2428
GC1-H63 SR8	1976	1083	1802										3605	1456	1825
GC2-H50 SR4	1372	769	1321										2643	1093	1415
GC2-H50 SR5	1742	1019	1863										2101	842	1045
GC2-H63 SR4	1372	769	1321	1330	476	492	2213	891	1113	3097	1306	1734	5748	2552	3598
GC2-H63 SR5	2032	1164	2065							2354	912	1074	5005	2157	2938
GC2-H63 SR6	1742	1019	1863							2556	1056	1364	5207	2301	3228
GC2-H63 SR7	2438	1414	2552										4517	1907	2532
GC2-H80 SR4	1372	769	1321	3039	1279	1693	4493	1962	2715	5946	2644	3737			
GC2-H80 SR5	2032	1164	2065	2296	884	1033	3749	1567	2055	5203	2249	3077			
GC2-H80 SR6	1742	1019	1863	2498	1028	1323	3951	1711	2345	5405	2394	3367			
GC2-H80 SR7	2438	1414	2552				3262	1317	1649	4715	1999	2671			
GC2-H100 SR4	1372	769	1321	5893	2620	3700									
GC2-H100 SR5	2032	1164	2065	5150	2225	3040									
GC2-H100 SR6	1742	1019	1863	5352	2369	3330									

Actuator model	Torque outputs at different oil supply pressure (Unit:Nm)														
	spring return torque			60 bar			80 bar			100 bar			160 bar		
	BTC(90°)	RTC(45°)	ETC(0°)	BTO(0°)	RTO(45°)	ETO(90°)	BTO(0°)	RTO(45°)	ETO(90°)	BTO(0°)	RTO(45°)	ETO(90°)	BTO(0°)	RTO(45°)	ETO(90°)
GC2-H100 SR7	2438	1414	2552	4662	1975	2634									
GC3-H2050 SR4	2856	1634	2894							3160	1210	1401	6793	2916	3955
GC3-H2050 SR5	3892	2192	3799										5889	2358	2919
GC3-H2050 SR6	4969	2783	4785										4903	1766	1841
GC3-H63 SR4	2856	1634	2894										4357	1772	2242
GC3-H63 SR5	3892	2192	3799										3453	1214	1206
GC3-H80 SR4	2856	1634	2894							5228	2181	2854	10101	4470	6281
GC3-H80 SR5	3892	2192	3799							4323	1622	1818	9197	3911	5244
GC3-H80 SR6	4969	2783	4785										8211	3320	4167
GC3-H80 SR7	5925	3253	5424										7572	2851	3211
GC3-H100 SR4	2856	1634	2894	4548	1862	2377	7029	3027	4121	9510	4192	5865			
GC3-H100 SR5	3892	2192	3799	3644	1303	1340	6125	2469	3085	8606	3634	4829			
GC3-H100 SR6	4969	2783	4785				5139	1877	2008	7620	3042	3752			
GC3-H100 SR7	5925	3253	5424							6981	2573	2796			
GC3-H120 SR4	2856	1634	2894	9533	4203	5881	13675	6148	8793						
GC3-H120 SR5	3892	2192	3799	8628	3644	4845	12771	5590	7757						
GC3-H120 SR6	4969	2783	4785	7642	3053	3767	11785	4998	6680						
GC3-H120 SR7	5925	3253	5424				11146	4529	5724						
GC4-H2063 SR4	4374	2479	4338							6402	2564	3176	12845	5590	7706
GC4-H2063 SR5	5702	3194	5490							5249	1850	1848	11693	4876	6378
GC4-H2063 SR6	7034	3976	6928										10254	4093	5046
GC4-H2063 SR7	8069	4548	7891										9292	3522	4011
GC4-H100 SR4	4374	2479	4338	3287	1101	987	5829	2295	2774	8370	3489	4560	15995	7070	9921
GC4-H100 SR5	5702	3194	5490				4677	1581	1446	7218	2775	3233	14843	6356	8593
GC4-H100 SR6	7034	3976	6928										13405	5573	7261
GC4-H100 SR7	8069	4548	7891										12442	5001	6226
GC4-H2080 SR4	4374	2479	4338	7049	2868	3631	10844	4651	6300	14640	6433	8968			
GC4-H2080 SR5	5702	3194	5490	5897	2154	2303	9692	3936	4972	13488	5719	7640			
GC4-H2080 SR6	7034	3976	6928				8254	3154	3639	12049	4936	6308			
GC4-H2080 SR7	8069	4548	7891				7291	2582	2605	11087	4365	5273	22473	9712	13278
GC4-H120 SR4	4374	2479	4338	7760	3202	4132	11793	5096	6967	15826	6990	9802			
GC4-H120 SR5	5702	3194	5490	6608	2488	2804	10641	4382	5639	14674	6276	8474			
GC4-H120 SR6	7034	3976	6928				9202	3599	4307	13235	5493	7142			
GC4-H120 SR7	8069	4548	7891				8240	3028	3272	12273	4922	6107			
GC4-H140 SR4	4374	2479	4338	13047	5685	7848	18842	8406	11922						
GC4-H140 SR5	5702	3194	5490	11895	4971	6520	17690	7692	10594						
GC4-H140 SR6	7034	3976	6928	10456	4188	5188	16251	6910	9262	22046	9631	13336			
GC4-H140 SR7	8069	4548	7891	9494	3617	4153	15289	6338	8227	21084	9059	12301			
GC5-H100 SR4	9364	5202	8836										14246	5637	6863
GC5-H100 SR5	11760	6417	10601										12481	4423	4467
GC5-H2080 SR4	9364	5202	8836							11901	4536	5215	24344	10380	13963
GC5-H2080 SR5	11760	6417	10601							10136	3322	2819	22579	9165	11566

Actuator model	Torque outputs at different oil supply pressure (Unit:Nm)														
	spring return torque			60 bar			80 bar			100 bar			160 bar		
	BTC(90°)	RTC(45°)	ETC(0°)	BTO(0°)	RTO(45°)	ETO(90°)	BTO(0°)	RTO(45°)	ETO(90°)	BTO(0°)	RTO(45°)	ETO(90°)	BTO(0°)	RTO(45°)	ETO(90°)
GC5-H2080 SR6	14046	7514	12022										21158	8068	9280
GC5-H120 SR4	9364	5202	8836				12848	4981	5881	18269	7527	9692	34532	15165	21125
GC5-H120 SR5	11760	6417	10601				11083	3766	3484	16504	6312	7296	32767	13950	18729
GC5-H120 SR6	14046	7514	12022							15083	5215	5010	31346	12853	16443
GC5-H120 SR7	17975	10153	17672										25696	10214	12514
GC5-H140 SR4	9364	5202	8836	12803	4960	5849	20016	8347	10920	27229	11735	15991	48868	21897	31204
GC5-H140 SR5	11760	6417	10601	11038	3745	3453	18251	7133	8524	25464	10520	13595	47103	20682	28808
GC5-H140 SR6	14046	7514	12022				16830	6035	6238	24043	9423	11309	45682	19585	26522
GC5-H140 SR7	17975	10153	17672							18393	6784	7380	40032	16946	22593
GC5-H160 SR7	17975	10153	17672							31917	13135	16888	61671	27108	37806
GC5-H160 SR4	23511	12684	20574							29015	10605	11352	58769	24578	32270
GC7-H140 SR4	16274	9115	15669				16322	5909	6218	24320	9666	11840	48314	20934	28709
GC7-H140 SR5	20649	11358	18999							20991	7422	7465	44984	18691	24334
GC7-H140 SR6	22151	12156	20261							19728	6624	5964	43722	17893	22832
GC7-H140 SR7	27262	15366	26660										37324	14683	17721
GC7-H2100 SR4	16274	9115	15669				20022	7647	8819	28945	11837	15092	55714	24409	33911
GC7-H2100 SR5	20649	11358	18999				16692	5404	4444	25615	9594	10717	52384	22166	29536
GC7-H2100 SR6	22151	12156	20261							24353	8796	9215	51122	21368	28034
GC7-H2100 SR7	27262	15366	26660										44723	18158	22923
GC7-H2125 SR4	16274	9115	15669	27340	11084	13963	41676	17817	24042	56013	24549	34122	99022	44748	64359
GC7-H2125 SR5	20649	11358	18999	24010	8841	9588	38347	15573	19667	52683	22306	29747	95693	42505	59984
GC7-H2125 SR6	22151	12156	20261	22748	8043	8087	37084	14775	18166	51421	21508	28245	94430	41707	58482
GC7-H2125 SR7	27262	15366	26660				30686	11566	13054	45023	18299	23133	88032	38497	53371
GC7-H2140 SR4	16274	9115	15669	40316	17178	23086	58978	25942	36206	77640	34706	49326			
GC7-H2140 SR5	20649	11358	18999	36986	14935	18711	55648	23699	31831	74310	32463	44951			
GC7-H2140 SR6	22151	12156	20261	35724	14137	17209	54386	22901	30330	73048	31665	43450			
GC7-H2140 SR7	27262	15366	26660	29326	10927	12098	47988	19691	25218	66650	28455	38338			
GC7-H160 SR4	16274	9115	15669	18118	6753	7480	29380	12042	15398	40643	17331	23316	74430	33199	47070
GC7-H160 SR5	20649	11358	18999				26050	9799	11023	37313	15088	18941	71100	30956	42695
GC7-H160 SR6	22151	12156	20261				24788	9001	9521	36051	14290	17439	69838	30158	41193
GC7-H160 SR7	27262	15366	26660							29652	11080	12327	63440	26948	36081
GC7-H180 SR4	16274	9115	15669	29217	11965	15283	44179	18992	25802	59141	26019	36321	104028	47099	67878
GC7-H180 SR5	20649	11358	18999	25887	9722	10908	40849	16749	21427	55812	23776	31946	100698	44856	63503
GC7-H180 SR6	22151	12156	20261	24625	8924	9406	39587	15951	19925	54549	22978	30444	99436	44058	62001
GC7-H180 SR7	27262	15366	26660				33189	12741	14814	48151	19768	25333	93037	40848	56890
GC8-H160 SR4	32403	18263	31687							30394	10892	11242	67642	28385	37429
GC8-H160 SR5	43169	23254	37625										61705	23395	26663
GC8-H160 SR6	50894	28025	46956										52373	18624	18939
GC8-H2125 SR4	32403	18263	31687				32593	11924	12788	48662	19471	24086	96872	42112	57979
GC8-H2125 SR5	43169	23254	37625							42725	14481	13320	90934	37122	47213
GC8-H2125 SR6	50894	28025	46956										81603	32351	39489
GC8-H2125 SR7	68196	36444	58201										70358	23932	22186

Actuator model	Torque outputs at different oil supply pressure (Unit:Nm)														
	spring return torque			60 bar			80 bar			100 bar			160 bar		
	BTC(90°)	RTC(45°)	ETC(0°)	BTO(0°)	RTO(45°)	ETO(90°)	BTO(0°)	RTO(45°)	ETO(90°)	BTO(0°)	RTO(45°)	ETO(90°)	BTO(0°)	RTO(45°)	ETO(90°)
GC8-H180 SR4	32403	18263	31687				35567	13321	14879	52381	21218	26700	102822	44906	62162
GC8-H180 SR5	43169	23254	37625							46443	16228	15934	96884	39916	51396
GC8-H180 SR6	50894	28025	46956										87553	35145	43672
GC8-H180 SR7	68196	36444	58201										76308	26726	26369
GC8-H2140 SR4	32403	18263	31687	31946	11621	12333	53157	21582	27245	74368	31543	42158	138001	61428	86894
GC8-H2140 SR5	43169	23254	37625				47219	16592	16479	68430	26553	31392	132063	56438	76128
GC8-H2140 SR6	50894	28025	46956							59099	21782	23667	122732	51666	68404
GC8-H2140 SR7	68196	36444	58201										111487	43247	51102
GC8-H2160 SR4	32403	18263	31687	55226	22554	28700	84197	36160	49068	113168	49766	69436			
GC8-H2160 SR5	43169	23254	37625	49289	17564	17934	78260	31170	38302	107231	44775	58670			
GC8-H2160 SR6	50894	28025	46956	39957	12793	10210	68928	26399	30578	97899	40004	50946			
GC8-H2160 SR7	68196	36444	58201				57684	17979	13275	86655	31585	33643			
GC8-H200 SR4	32403	18263	31687	33498	12350	13424	55226	22554	28700	76955	32758	43976	142140	63371	89804
GC8-H200 SR5	43169	23254	37625				49289	17564	17934	71017	27768	33210	136202	58381	79038
GC8-H200 SR6	50894	28025	46956				39957	12793	10210	61686	22997	25486	126871	53610	71314
GC8-H200 SR7	68196	36444	58201										115626	45191	54011
GC9-H180 SR4	56407	30416	49296										101131	40230	49349
GC9-H180 SR5	69541	37539	60953										89474	33106	36215
GC9-H200 SR4	56407	30416	49296										152169	64199	85231
GC9-H200 SR5	69541	37539	60953										140512	57075	72097
GC9-H200 SR6	85691	46509	76179										125286	48106	55947
GC9-H200 SR7	107114	57242	91415										110050	37373	34524
GC9-H220 SR4	56407	30416	49296				79641	30138	34241	111876	45276	56903	208579	90691	124889
GC9-H220 SR5	69541	37539	60953				67985	23014	21107	100219	38152	43769	196922	83567	111756
GC9-H220 SR6	85691	46509	76179										181696	74598	95606
GC9-H220 SR7	107114	57242	91415										166460	63865	74183
GC9-H2160 SR4	56407	30416	49296				89043	34553	40851	123628	50795	65165	227382	99522	138109
GC9-H2160 SR5	69541	37539	60953				77386	27429	27717	111971	43671	52032	215725	92398	124975
GC9-H2160 SR6	85691	46509	76179							96745	34702	35882	200499	83428	108825
GC9-H2160 SR7	107114	57242	91415							81509	23969	14459	185264	72695	87402
GC9-H2180 SR4	56407	30416	49296	88707	34395	40615	134708	55999	72955	180710	77603	105296			
GC9-H2180 SR5	69541	37539	60953	77051	27271	27481	123052	48875	59822	169053	70479	92162	307056	135290	189184
GC9-H2180 SR6	85691	46509	76179				107826	39906	43672	153827	61509	76012	291830	126320	173034
GC9-H2180 SR7	107114	57242	91415				92590	29173	22249	138591	50776	54590	276594	115587	151612
GC9-H2200 SR4	56407	30416	49296	126986	52372	67526	185746	79968	108837	244507	107564	150148			
GC9-H2200 SR5	69541	37539	60953	115329	45248	54392	174089	72844	95703	232850	100440	137014			
GC9-H2200 SR6	85691	46509	76179	100103	36279	38242	158863	63875	79553	217624	91471	120864			
GC9-H2200 SR7	107114	57242	91415				143628	53142	58131	202388	80738	99442			

BTS-Gxx-H Range Hydraulic Acturators

Single-Return Torque Output
Canted Yoke Configuration

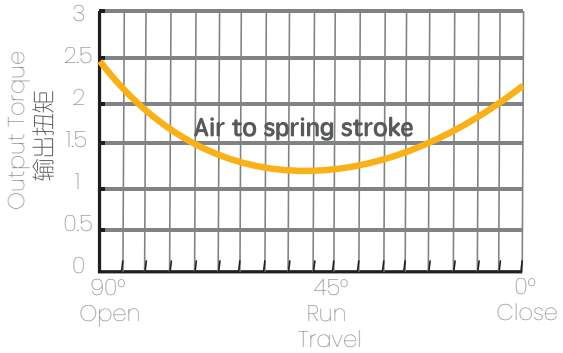

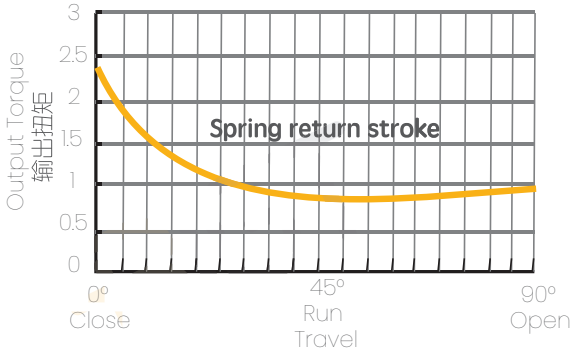

Air Shut (FO)

Actuator model	Torque outputs at different oil supply pressure (Unit:Nm)														
	spring return torque			60 bar			80 bar			100 bar			160 bar		
	BTO(0°)	RTO(45°)	ETO(90°)	BTC(90°)	RTC(45°)	ETC(0°)	BTC(90°)	RTC(45°)	ETC(0°)	BTC(90°)	RTC(45°)	ETC(0°)	BTC(90°)	RTC(45°)	ETC(0°)
GC0-H40 SR4	452	218	349							467	185	240	956	427	655
GC0-H40 SR5	561	272	440										864	373	547
GC0-H40 SR6	692	336	544										761	309	415
GC0-H50 SR4	452	218	349	507	205	274	793	346	516	1078	487	759			
GC0-H50 SR5	561	272	440				701	292	408	987	433	651			
GC0-H50 SR6	692	336	544							883	369	519			
GC1-H40 SR4	782	380	615										883	361	489
GC1-H50 SR4	782	380	615							1186	510	746	2266	1044	1662
GC1-H50 SR5	978	475	768							1032	415	550	2113	949	1467
GC1-H50 SR6	1169	578	960										1920	846	1276
GC1-H50 SR7	1574	786	1327										1554	637	870
GC1-H63 SR4	782	380	615	1312	572	853	1954	890	1398	2596	1207	1943			
GC1-H63 SR5	978	475	768	1158	478	657	1801	795	1202	2443	1112	1747			
GC1-H63 SR6	1169	578	960	966	375	466	1609	692	1011	2251	1009	1556			
GC1-H63 SR7	1574	786	1327							1884	801	1151	3811	1753	2786
GC1-H63 SR8	2267	1083	1712										3426	1456	2093
GC2-H50 SR4	1574	769	1256										2511	1093	1623
GC2-H50 SR5	1999	1019	1770										1997	842	1198
GC2-H63 SR4	1574	769	1256	1264	476	564	2104	891	1277	2943	1306	1989	5463	2552	4127
GC2-H63 SR5	2331	1164	1962							2237	912	1232	4756	2157	3370
GC2-H63 SR6	1999	1019	1770							2429	1056	1565	4948	2301	3703
GC2-H63 SR7	2796	1414	2425										4293	1907	2905
GC2-H80 SR4	1574	769	1256	2888	1279	1942	4269	1962	3114	5651	2644	4287			
GC2-H80 SR5	2331	1164	1962	2182	884	1185	3563	1567	2358	4944	2249	3530			
GC2-H80 SR6	1999	1019	1770	2374	1028	1518	3755	1711	2690	5136	2394	3862			
GC2-H80 SR7	2796	1414	2425				3100	1317	1892	4481	1999	3064			
GC2-H100 SR4	1574	769	1256	5600	2620	4244									

Actuator model	Torque outputs at different oil supply pressure (Unit:Nm)														
	spring return torque			60 bar			80 bar			100 bar			160 bar		
	BTO(0°)	RTO(45°)	ETO(90°)	BTC(90°)	RTC(45°)	ETC(0°)	BTC(90°)	RTC(45°)	ETC(0°)	BTC(90°)	RTC(45°)	ETC(0°)	BTC(90°)	RTC(45°)	ETC(0°)
GC2-H100 SR5	2331	1164	1962	4894	2225	3487									
GC2-H100 SR6	1999	1019	1770	5086	2369	3820									
GC2-H100 SR7	2796	1414	2425	4431	1975	3022									
GC3-H2050 SR4	3276	1634	2751							3003	1210	1607	6456	2916	4537
GC3-H2050 SR5	4465	2192	3610										5596	2358	3348
GC3-H2050 SR6	5700	2783	4547										4659	1766	2112
GC3-H63 SR4	3276	1634	2751										4141	1772	2572
GC3-H63 SR5	4465	2192	3610										3281	1214	1383
GC3-H80 SR4	3276	1634	2751							4968	2181	3274	9599	4470	7204
GC3-H80 SR5	4465	2192	3610							4108	1622	2086	8740	3911	6016
GC3-H80 SR6	5700	2783	4547										7803	3320	4780
GC3-H80 SR7	6797	3253	5154										7196	2851	3684
GC3-H100 SR4	3276	1634	2751	4323	1862	2726	6680	3027	4727	9038	4192	6728			
GC3-H100 SR5	4465	2192	3610	3463	1303	1538	5821	2469	3538	8178	3634	5539			
GC3-H100 SR6	5700	2783	4547				4884	1877	2303	7242	3042	4304			
GC3-H100 SR7	6797	3253	5154							6634	2573	3207			
GC3-H120 SR4	3276	1634	2751	9059	4203	6746	12996	6148	10087						
GC3-H120 SR5	4465	2192	3610	8199	3644	5557	12136	5590	8898						
GC3-H120 SR6	5700	2783	4547	7263	3053	4322	11199	4998	7662						
GC3-H120 SR7	6797	3253	5154				10592	4529	6566						
GC4-H2063 SR4	5017	2479	4122							6083	2564	3643	12207	5590	8840
GC4-H2063 SR5	6540	3194	5217							4989	1850	2120	11112	4876	7317
GC4-H2063 SR6	8069	3976	6584										9745	4093	5788
GC4-H2063 SR7	9256	4548	7499										8830	3522	4601
GC4-H100 SR4	5017	2479	4122	3124	1101	1132	5539	2295	3182	7955	3489	5231	15201	7070	11380
GC4-H100 SR5	6540	3194	5217				4444	1581	1658	6860	2775	3708	14106	6356	9857
GC4-H100 SR6	8069	3976	6584										12739	5573	8329
GC4-H100 SR7	9256	4548	7499										11824	5001	7142
GC4-H2080 SR4	5017	2479	4122	6699	2868	4165	10305	4651	7226	13912	6433	10287			
GC4-H2080 SR5	6540	3194	5217	5604	2154	2642	9211	3936	5703	12817	5719	8764			
GC4-H2080 SR6	8069	3976	6584				7844	3154	4175	11450	4936	7236			
GC4-H2080 SR7	9256	4548	7499				6929	2582	2988	10536	4365	6048	21357	9712	15231
GC4-H120 SR4	5017	2479	4122	7375	3202	4739	11207	5096	7992	15040	6990	11244			
GC4-H120 SR5	6540	3194	5217	6280	2488	3216	10112	4382	6468	13945	6276	9721			
GC4-H120 SR6	8069	3976	6584				8745	3599	4940	12578	5493	8192			
GC4-H120 SR7	9256	4548	7499				7831	3028	3753	11663	4922	7005			
GC4-H140 SR4	5017	2479	4122	12399	5685	9003	17906	8406	13676						
GC4-H140 SR5	6540	3194	5217	11304	4971	7480	16811	7692	12153						
GC4-H140 SR6	8069	3976	6584	9937	4188	5951	15444	6910	10625	20951	9631	15298			

Actuator model	Torque outputs at different oil supply pressure (Unit:Nm)														
	spring return torque			60 bar			80 bar			100 bar			160 bar		
	BTO(0°)	RTO(45°)	ETO(90°)	BTC(90°)	RTC(45°)	ETC(0°)	BTC(90°)	RTC(45°)	ETC(0°)	BTC(90°)	RTC(45°)	ETC(0°)	BTC(90°)	RTC(45°)	ETC(0°)
GC4-H140 SR7	9256	4548	7499	9022	3617	4764	14529	6338	9437	20036	9059	14111			
GC5-H100 SR4	10741	5202	8397										13538	5637	7873
GC5-H100 SR5	13490	6417	10074										11861	4423	5124
GC5-H2080 SR4	10741	5202	8397							11310	4536	5982	23134	10380	16016
GC5-H2080 SR5	13490	6417	10074							9633	3322	3234	21457	9165	13268
GC5-H2080 SR6	16112	7514	11424										20107	8068	10646
GC5-H120 SR4	10741	5202	8397				12210	4981	6746	17361	7527	11117	32816	15165	24233
GC5-H120 SR5	13490	6417	10074				10533	3766	3997	15684	6312	8369	31139	13950	21484
GC5-H120 SR6	16112	7514	11424							14334	5215	5747	29789	12853	18862
GC5-H120 SR7	20619	10153	16794										24419	10214	14355
GC5-H140 SR4	10741	5202	8397	12167	4960	6709	19021	8347	12526	25876	11735	18343	46440	21897	35794
GC5-H140 SR5	13490	6417	10074	10490	3745	3961	17344	7133	9778	24199	10520	15594	44763	20682	33045
GC5-H140 SR6	16112	7514	11424				15994	6035	7155	22849	9423	12972	43412	19585	30423
GC5-H140 SR7	20619	10153	16794							17479	6784	8465	38043	16946	25916
GC7-H140 SR4	18668	9115	14891				15511	5909	7132	23112	9666	13582	45914	20934	32932
GC7-H140 SR5	23686	11358	18055							19948	7422	8563	42750	18691	27913
GC7-H140 SR6	25409	12156	19255							18748	6624	6841	41550	17893	26191
GC7-H140 SR7	31273	15366	25335										35469	14683	20327
GC7-H2100 SR4	18668	9115	14891				19027	7647	10116	27507	11837	17312	52946	24409	38899
GC7-H2100 SR5	23686	11358	18055				15863	5404	5097	24343	9594	12293	49781	22166	33881
GC7-H2100 SR6	25409	12156	19255							23143	8796	10570	48582	21368	32158
GC7-H2100 SR7	31273	15366	25335										42501	18158	26295
GC7-H2125 SR4	18668	9115	14891	25982	11084	16017	39606	17817	27579	53230	24549	39141	94103	44748	73826
GC7-H2125 SR5	23686	11358	18055	22817	8841	10999	36442	15573	22560	50066	22306	34122	90938	42505	68807
GC7-H2125 SR6	25409	12156	19255	21618	8043	9276	35242	14775	20838	48866	21508	32399	89739	41707	67084
GC7-H2125 SR7	31273	15366	25335				29161	11566	14974	42786	18299	26536	83658	38497	61221
GC7-H2140 SR4	18668	9115	14891	38313	17178	26482	56048	25942	41532	73783	34706	56582			
GC7-H2140 SR5	23686	11358	18055	35149	14935	21463	52884	23699	36513	70618	32463	51563			
GC7-H2140 SR6	25409	12156	19255	33949	14137	19741	51684	22901	34791	69419	31665	49841			
GC7-H2140 SR7	31273	15366	25335	27869	10927	13877	45604	19691	28927	63338	28455	43977			
GC7-H160 SR4	18668	9115	14891	17218	6753	8580	27921	12042	17663	38623	17331	26745	70732	33199	53993
GC7-H160 SR5	23686	11358	18055				24756	9799	12644	35459	15088	21727	67568	30956	48975
GC7-H160 SR6	25409	12156	19255				23557	9001	10921	34260	14290	20004	66368	30158	47252
GC7-H160 SR7	31273	15366	25335							28179	11080	14141	60288	26948	41388
GC7-H180 SR4	18668	9115	14891	27765	11965	17531	41984	18992	29597	56203	26019	41664	98860	47099	77862
GC7-H180 SR5	23686	11358	18055	24601	9722	12512	38820	16749	24579	53039	23776	36645	95695	44856	72844
GC7-H180 SR6	25409	12156	19255	23402	8924	10790	37620	15951	22856	51839	22978	34922	94496	44058	71121
GC7-H180 SR7	31273	15366	25335				31540	12741	16993	45759	19768	29059	88415	40848	65258
GC8-H160 SR4	37170	18263	30113							28884	10892	12896	64282	28385	42935
GC8-H160 SR5	49519	23254	35756										58639	23395	30585
GC8-H160 SR6	58380	28025	44623										49771	18624	21725

Actuator model	Torque outputs at different oil supply pressure (Unit:Nm)														
	spring return torque			60 bar			80 bar			100 bar			160 bar		
	BTO(0°)	RTO(45°)	ETO(90°)	BTC(90°)	RTC(45°)	ETC(0°)	BTC(90°)	RTC(45°)	ETC(0°)	BTC(90°)	RTC(45°)	ETC(0°)	BTC(90°)	RTC(45°)	ETC(0°)
GC8-H2125 SR4	37170	18263	30113				30973	11924	14669	46245	19471	27628	92059	42112	66507
GC8-H2125 SR5	49519	23254	35756							40602	14481	15279	86417	37122	54158
GC8-H2125 SR6	58380	28025	44623										77549	32351	45297
GC8-H2125 SR7	78227	36444	55309										66863	23932	25450
GC8-H180 SR4	37170	18263	30113				33800	13321	17068	49778	21218	30627	97713	44906	71305
GC8-H180 SR5	49519	23254	35756							44136	16228	18278	92070	39916	58956
GC8-H180 SR6	58380	28025	44623										83203	35145	50095
GC8-H180 SR7	78227	36444	55309										72517	26726	30248
GC8-H2140 SR4	37170	18263	30113	30359	11621	14147	50516	21582	31253	70673	31543	48359	131145	61428	99676
GC8-H2140 SR5	49519	23254	35756				44873	16592	18903	65030	26553	36009	125502	56438	87326
GC8-H2140 SR6	58380	28025	44623							56163	21782	27149	116634	51666	78466
GC8-H2140 SR7	78227	36444	55309										105948	43247	58618
GC8-H2160 SR4	37170	18263	30113	52482	22554	32922	80014	36160	56286	107546	49766	79649			
GC8-H2160 SR5	49519	23254	35756	46840	17564	20572	74371	31170	43936	101903	44775	67300			
GC8-H2160 SR6	58380	28025	44623	37972	12793	11712	65504	26399	35076	93036	40004	58439			
GC8-H2160 SR7	78227	36444	55309				54818	17979	15228	82349	31585	38592			
GC8-H200 SR4	37170	18263	30113	31834	12350	15399	52482	22554	32922	73131	32758	50445	135078	63371	103013
GC8-H200 SR5	49519	23254	35756				46840	17564	20572	67489	27768	38095	129435	58381	90664
GC8-H200 SR6	58380	28025	44623				37972	12793	11712	58621	22997	29235	120567	53610	81803
GC8-H200 SR7	78227	36444	55309										109881	45191	61956
GC9-H180 SR4	64704	30416	46847										96107	40230	56608
GC9-H180 SR5	79770	37539	57924										85029	33106	41542
GC9-H200 SR4	64704	30416	46847										144609	64199	97767
GC9-H200 SR5	79770	37539	57924										133531	57075	82702
GC9-H200 SR6	98295	46509	72394										119061	48106	64176
GC9-H200 SR7	122869	57242	86873										104582	37373	39602
GC9-H220 SR4	64704	30416	46847				75685	30138	39277	106318	45276	65273	198216	90691	143259
GC9-H220 SR5	79770	37539	57924				64607	23014	24212	95240	38152	50207	187138	83567	128194
GC9-H220 SR6	98295	46509	72394										172669	74598	109668
GC9-H220 SR7	122869	57242	86873										158190	63865	85094
GC9-H2160 SR4	64704	30416	46847				84619	34553	46859	117486	50795	74750	216085	99522	158423
GC9-H2160 SR5	79770	37539	57924				73542	27429	31794	106408	43671	59685	205008	92398	143358
GC9-H2160 SR6	98295	46509	72394							91938	34702	41159	190538	83428	124832
GC9-H2160 SR7	122869	57242	86873							77460	23969	16586	176059	72695	100258
GC9-H2180 SR4	64704	30416	46847	84300	34395	46589	128016	55999	83686	171731	77603	120784			
GC9-H2180 SR5	79770	37539	57924	73223	27271	31523	116938	48875	68621	160654	70479	105719	291801	135290	217012
GC9-H2180 SR6	98295	46509	72394				102469	39906	50095	146184	61509	87193	277331	126320	198486
GC9-H2180 SR7	122869	57242	86873				87990	29173	25522	131705	50776	62619	262852	115587	173912
GC9-H2200 SR4	64704	30416	46847	120677	52372	77458	176518	79968	124846	232359	107564	172233			
GC9-H2200 SR5	79770	37539	57924	109599	45248	62393	165440	72844	109780	221281	100440	157168			
GC9-H2200 SR6	98295	46509	72394	95129	36279	43867	150971	63875	91255	206812	91471	138642			
GC9-H2200 SR7	122869	57242	86873				136492	53142	66681	192333	80738	114069			

Overall Dimensions

Double-Acting & Single-Cylinder Configuraion
(Symmetric/Canted Yoke)

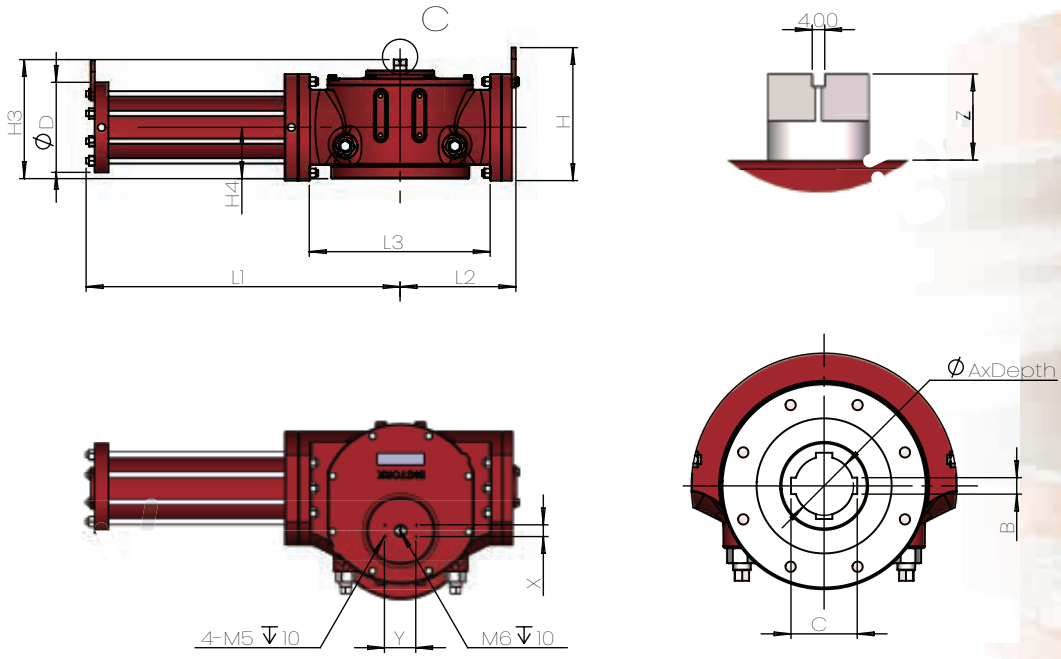

Double-Acting & Double-Cylinder Configuraion
(Symmetric/Canted Yoke)

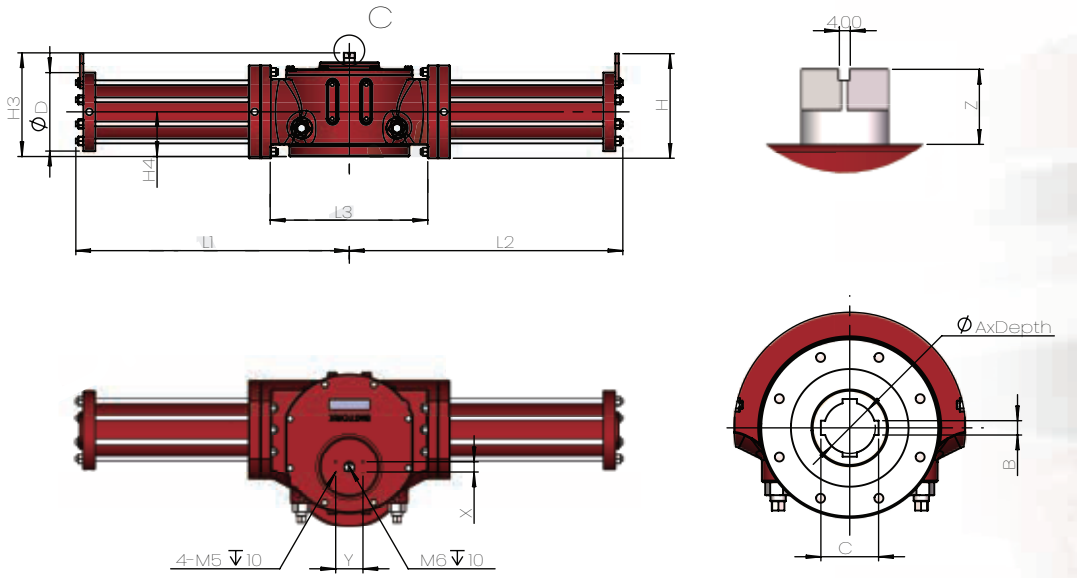

Hyduralic Scotch Yoke Actuator - Overall Dimensions

MODEL	D	L	L1	L2	L3	H1	H2	H3	H4	A*Depth	B	C	X*Y*Z	Flanges to ISO5211	Pipe/Port Size to air supply
G0-H32	1137	566	430	36	240	40	31	179	75	Φ36x60	10	42.6	30x80x20	F12/F10	G3/8"
G0-H40	145	566	430	136	240	50	31	179	75	Φ36x60	10	42.6	30x80x20	F12/F10	G3/8"
G0-H50	155	566	430	136	240	50	31	179	75	Φ36x60	10	42.6	30x80x20	F12/F10	G3/8"
G1-H40	145	710	545	165	290	50	53	219	86	Φ40x70	12	46.6	30x80x20	F14	G3/8"
G1-H50	155	710	545	165	290	74	53	219	86	Φ40x70	12	46.6	30x80x20	F14	G3/8"
G1-H63	168	710	545	165	290	99	53	219	86	Φ40x70	12	46.6	30x80x20	F14	G3/8"
G2-H50	155	789	602	187	334	69	53	229	91	Φ50x90	14	57.6	30x80x20	F16	G3/8"
G2-H63	168	789	602	187	334	97	53	229	91	Φ50x90	14	57.6	30x80x20	F16	G3/8"
G2-H80	185	789	602	187	334	122	53	229	91	Φ50x90	14	57.6	30x80x20	F16	G1/2"
G2-H100	205	789	602	187	334	122	53	229	91	Φ50x90	14	57.6	30x80x20	F16	G1/2"
G3-H2050	155	1340	670	670	390	103	70	262	110	Φ60x120	18	68.8	30x130x30	F25/F16	G3/8"
G3-H63	168	890	670	220	390	128	70	262	110	Φ60x120	18	68.8	30x130x30	F25/F16	G3/8"
G3-H80	185	890	670	220	390	153	70	262	110	Φ60x120	18	68.8	30x130x30	F25/F16	G1/2"
G3-H100	205	890	670	220	390	153	70	262	110	Φ60x120	18	68.8	30x130x30	F25/F16	G1/2"
G3-H120	225	890	670	220	390	153	70	262	110	Φ60x120	18	68.8	30x130x30	F25/F16	G1/2"
G4-H2063	168	1576	788	788	475	109	72	307	131	Φ80x150	22	90.8	30x130x30	F30/F25	G3/8"
G4-H100	205	1046	788	258	475	132	72	307	131	Φ80x150	22	90.8	30x130x30	F30/F25	G1/2"
G4-H2080	185	1576	788	788	475	159	72	307	131	Φ80x150	22	90.8	30x130x30	F30/F25	G1/2"
G4-H120	225	1046	788	258	475	159	72	307	131	Φ80x150	22	90.8	30x130x30	F30/F25	G1/2"
G4-H140	245	1046	788	258	475	159	72	307	131	Φ80x150	22	90.8	30x130x30	F30/F25	G3/4"
G5-H100	205	1180	847	333	595	133	72	364	157	Φ98x180	28	110.8	30x130x30	F35/F30	G1/2"
G5-H2080	185	1694	847	847	595	153	72	364	157	Φ98x180	28	110.8	30x130x30	F35/F30	G1/2"
G5-H120	225	1180	847	333	595	183	72	364	157	Φ98x180	28	110.8	30x130x30	F35/F30	G1/2"
G5-H140	245	1180	847	333	595	233	72	364	157	Φ98x180	28	110.8	30x130x30	F35/F30	G3/4"
G7-H140	245	1475	1073	402	736	152	109	385	199	Φ120x200	32	134.8	30x130x30	F40	G3/4"
G7-H2100	205	2146	1073	1073	736	202	109	385	199	Φ120x200	32	134.8	30x130x30	F40	G1/2"
G7-H2125	230	2146	1073	1073	736	102	109	385	199	Φ120x200	32	134.8	30x130x30	F40	G1/2"
G7-H2140	245	2146	1073	1073	736	252	109	385	199	Φ120x200	32	134.8	30x130x30	F40	G3/4"
G7-H160	265	2066	1073	993	736	127	109	385	199	Φ120x200	32	134.8	30x130x30	F40	G3/4"
G7-H180	285	1475	1073	402	736	257	109	385	199	Φ120x200	32	134.8	30x130x30	F40	G3/4"
G8-H160	265	1749	1288	461	850	152	100	461	193	Φ160x240	40	178.8	30x130x30	F48/F40	G3/4"
G8-H2125	230	2576	1288	1288	850	282	100	461	193	Φ160x240	40	178.8	30x130x30	F48/F40	G1/2"
G8-H180	185	1749	1288	461	850	282	100	461	193	Φ160x240	40	178.8	30x130x30	F48/F40	G3/4"
G8-H2140	245	2576	1288	1288	850	182	100	461	193	Φ160x240	40	178.8	30x130x30	F48/F40	G3/4"
G8-H2160	265	2576	1288	1288	850	332	100	461	193	Φ160x240	40	178.8	30x130x30	F48/F40	G3/4"
G8-H200	305	1749	1288	461	850	208	100	461	193	Φ160x240	40	178.8	30x130x30	F48/F40	G3/4"
G9-H180	285	2094	1494	600	1080	308	100	502	249	Φ220x250	50	242.8	30x130x30	F60/F48	G3/4"
G9-H200	305	2094	1494	600	1080	208	100	502	249	Φ220x250	50	242.8	30x130x30	F60/F48	G3/4"
G9-H220	325	2094	1494	600	1080	353	100	502	249	Φ220x250	50	242.8	30x130x30	F60/F48	G3/4"
G9-H2160	265	2988	1494	1494	1080	408	100	502	249	Φ220x250	50	242.8	30x130x30	F60/F48	G3/4"
G9-H2180	285	2988	1494	1494	1080	308	100	502	249	Φ220x250	50	242.8	30x130x30	F60/F48	G3/4"
G9-H2200	305	2988	1494	1494	1080	408	100	502	249	Φ220x250	50	242.8	30x130x30	F60/F48	G3/4"

* There are two F standard specifications,and the ISO 5211
flange positioning stop port is non-standard, please pay attention to check.

Overall Dimensions

Spring-Return Configuraion (Symmetric/Canted Yoke)

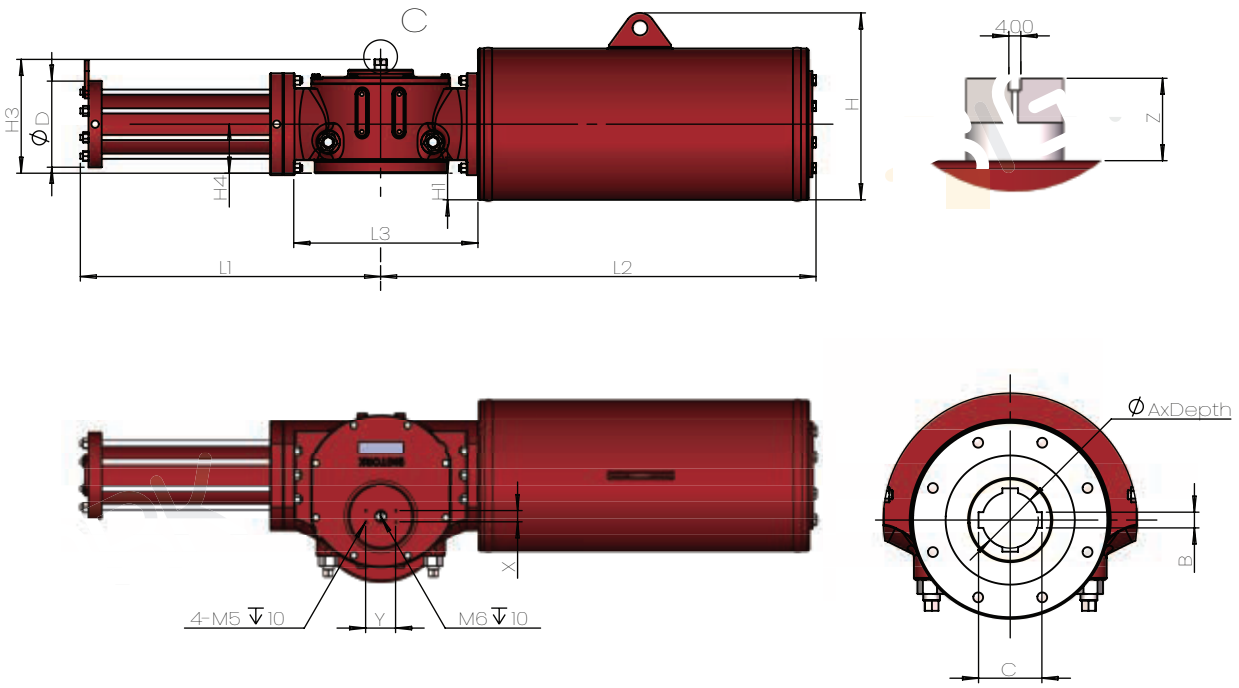

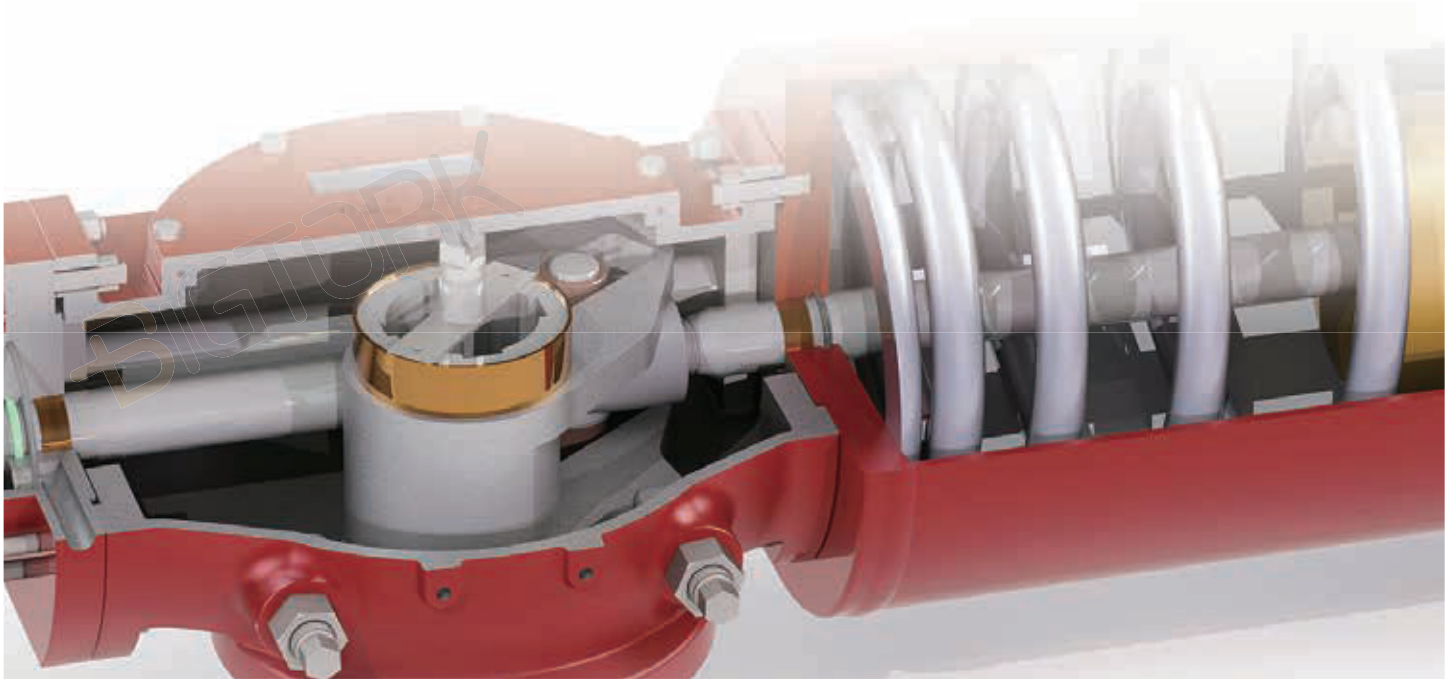

Hyduralic Scotch Yoke Actuator - Overall Dimensions

MODEL	D	L	L1	L2	L3	H	H1	H3	H4	A*Depth	B	C	X * Y * Z	Flanges to ISO5211	Pipe/Port Size to air supply
G0-H40	145	1019	430	589	240	220	40	179	75	Φ36x60	10	42.6	30x80x20	F12/F10	G3/8"
G0-H50	155	1019	430	589	240	220	50	179	75	Φ36x60	10	42.6	30x80x20	F12/F10	G3/8"
G1-H40	145	1405	545	860	290	300	50	219	86	Φ40x70	12	46.6	30x80x20	F14	G3/8"
G1-H50	155	1405	545	860	290	300	74	219	86	Φ40x70	12	46.6	30x80x20	F14	G3/8"
G1-H63	168	1405	545	860	290	300	99	219	86	Φ40x70	12	46.6	30x80x20	F14	G3/8"
G2-H50	155	1513	602	911	334	300	77	229	91	Φ50x90	14	57.6	30x80x20	F16	G3/8"
G2-H63	168	1513	602	911	334	300	97	229	91	Φ50x90	14	57.6	30x80x20	F16	G3/8"
G2-H80	185	1513	602	911	334	300	122	229	91	Φ50x90	14	57.6	30x80x20	F16	G1/2"
G2-H100	205	1513	602	911	334	300	150	229	91	Φ50x90	14	57.6	30x80x20	F16	G1/2"
G3-H2050	155	1730	670	1060	390	355	103	262	110	Φ60x120	18	68.8	30x130x30	F25/F16	G3/8"
G3-H63	168	1730	670	1060	390	355	128	262	110	Φ60x120	18	68.8	30x130x30	F25/F16	G3/8"
G3-H80	185	1730	670	1060	390	355	153	262	110	Φ60x120	18	68.8	30x130x30	F25/F16	G1/2"
G3-H100	205	1730	670	1060	390	355	190	262	110	Φ60x120	18	68.8	30x130x30	F25/F16	G1/2"
G3-H120	225	1730	670	1060	390	355	190	262	110	Φ60x120	18	68.8	30x130x30	F25/F16	G1/2"
G4-H2063	168	1919	788	1131	475	480	109	307	131	Φ80x150	22	90.8	30x130x30	F30/F25	G3/8"
G4-H100	205	1919	788	1131	475	480	132	307	131	Φ80x150	22	90.8	30x130x30	F30/F25	G1/2"
G4-H2080	185	1919	788	1131	475	480	159	307	131	Φ80x150	22	90.8	30x130x30	F30/F25	G1/2"
G4-H120	225	1919	788	1131	475	480	185	307	131	Φ80x150	22	90.8	30x130x30	F30/F25	G1/2"
G4-H140	245	1919	788	1131	475	480	220	307	131	Φ80x150	22	90.8	30x130x30	F30/F25	G3/4"
G5-H100	205	2202	847	1355	595	590	133	364	157	Φ98x180	28	110.8	30x130x30	F35/30	G1/2"
G5-H2080	185	2202	847	1355	595	590	160	364	157	Φ98x180	28	110.8	30x130x30	F35/30	G1/2"
G5-H120	225	2202	847	1355	595	590	183	364	157	Φ98x180	28	110.8	30x130x30	F35/30	G1/2"
G5-H140	245	2546	847	1699	595	590	250	364	157	Φ98x180	28	110.8	30x130x30	F35/30	G3/4"
G7-H140	245	2964	1073	1891	736	590	152	385	199	Φ120x200	32	134.8	30x130x30	F40	G3/4"
G7-H2100	205	2964	1073	1891	736	590	202	385	199	Φ120x200	32	134.8	30x130x30	F40	G1/2"
G7-H2125	230	2964	1073	1891	736	590	230	385	199	Φ120x200	32	134.8	30x130x30	F40	G1/2"
G7-H2140	245	3124	1073	2051	736	590	257	385	199	Φ120x200	32	134.8	30x130x30	F40	G3/4"
G7-H160	265	3124	1073	2051	736	590	290	385	199	Φ120x200	32	134.8	30x130x30	F40	G3/4"
G7-H180	285	3124	1073	2051	736	590	320	385	199	Φ120x200	32	134.8	30x130x30	F40	G3/4"
G8-H160	265	3588	1288	2300	850	700	282	461	193	Φ160x240	40	178.8	30x130x30	F48/F40	G3/4"
G8-H2125	230	3588	1288	2300	850	700	332	461	193	Φ160x240	40	178.8	30x130x30	F48/F40	G1/2"
G8-H180	285	3588	1288	2300	850	700	382	461	193	Φ160x240	40	178.8	30x130x30	F48/F40	G3/4"
G8-H2140	245	3588	1288	2300	850	700	382	461	193	Φ160x240	40	178.8	30x130x30	F48/F40	G3/4"
G8-H2160	265	3588	1288	2300	850	700	382	461	193	Φ160x240	40	178.8	30x130x30	F48/F40	G3/4"
G8-H200	305	3588	1288	2300	850	700	382	461	193	Φ160x240	40	178.8	30x130x30	F48/F40	G3/4"
G9-H180	285	4121	1494	2627	1080	850	308	502	249	Φ220x250	50	242.8	30x130x30	F60/48	G3/4"
G9-H200	305	4121	1494	2627	1080	850	358	502	249	Φ220x250	50	242.8	30x130x30	F60/48	G3/4"
G9-H220	325	4121	1494	2627	1080	850	408	502	249	Φ220x250	50	242.8	30x130x30	F60/48	G3/4"
G9-H2160	265	4121	1494	2627	1080	850	308	502	249	Φ220x250	50	242.8	30x130x30	F60/48	G3/4"
G9-H2180	285	4121	1494	2627	1080	850	308	502	249	Φ220x250	50	242.8	30x130x30	F60/48	G3/4"
G9-H2200	305	4121	1494	2627	1080	850	308	502	249	Φ220x250	50	242.8	30x130x30	F60/48	G3/4"

* There are two F standard specifications,and the ISO 5211
flange positioning stop port is non-standard, please pay attention to check.

HOW TO AVOID PROBLEMS

· Ball valves shall be transported and stored with the ball in the fully open position.
· Flanged ends and welded ends shall be protected.
· End protection shall be removed only when the valve is installed in the line.
· Valves shall be handled using the proper lifting lugs.
· Valves shall be stored according to Elite storage procedures. Long term storage shall be avoided.
· For welded-end valves, advice Elite if there will be a post weld heat treatment (transition pups may be necessary to avoid damages to seals).
· Flush and clean the line before operating the valve.
· Make sure no line-testing fluid is left in the line and/or the valve body.
· Avoid leaving the valve body filled with salt water to prevent internal corrosion.
· During line-testing, valves shall be left in the partially open position for the minimum possible amount of time.
· Standard ball valves shall be used for on-off service only. Throttling service (use of the valve with the ball partially open) can damage the seats.
· Make sure to take into consideration the actual service conditions when selecting materials for O-rings and seat inserts.
· Always specify anti-explosive decompression material for valves to be used in high pressure gas service.
· Make sure the selected actuator has been properly sized (an oversized actuator can be as dangerous as an undersized one).
· Advise Elite of cycle frequency to ensure proper sizing of actuator.
· Do not use the actuator to lift the valve.

◀ WARRANTY CLAUSE

Elite Flow Control products are delivered with a standard guarantee of good performance for the period of 18 months after the delivery date or 12 months of operation after commissioning.

Warning: The scope of Warranty is covered for manufacturing defects only. In case the valve failure is due to the wrong operations by the customer the warranty is not applicable.
In order to claim the warranty due to the manufacturing defects, the customer needs to prepare the detailed rejection report including the inspection procedure, operational report, pictures of valves, if this report proves that the fault is due to the manufacturing defect, Elite will provide the appropriate solution.

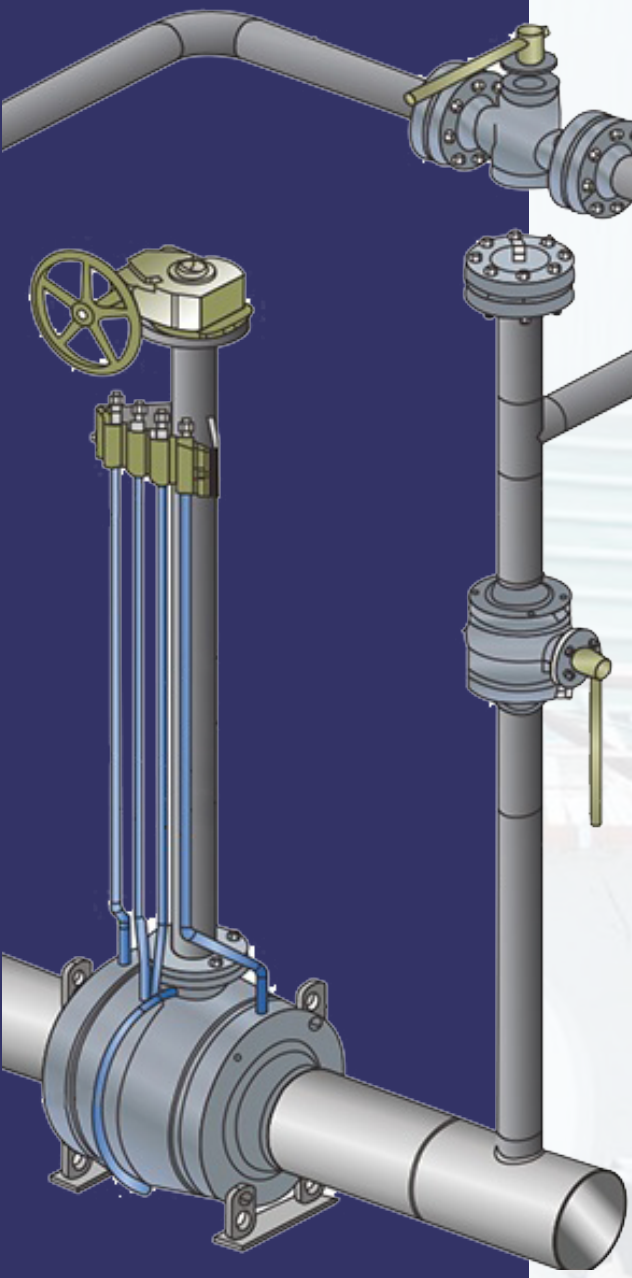

ELITE®
FLOW CONTROL

WE CONTROL THE FLOW

Elite Flow Control USA LLC
13220 Murphy Road, Unit #100
Stafford, TX 77477
United States of America
Tel: 832-987-1774 / 832-539-6968
Email: contact@elitegocl.com
Web:www.eliteflowcontrolusa.com
www.elitegocl.com